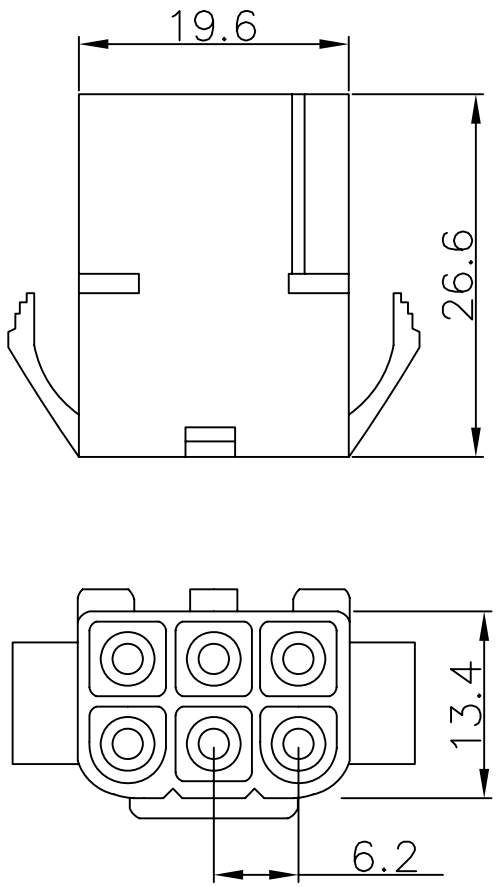

L-PE-2X03

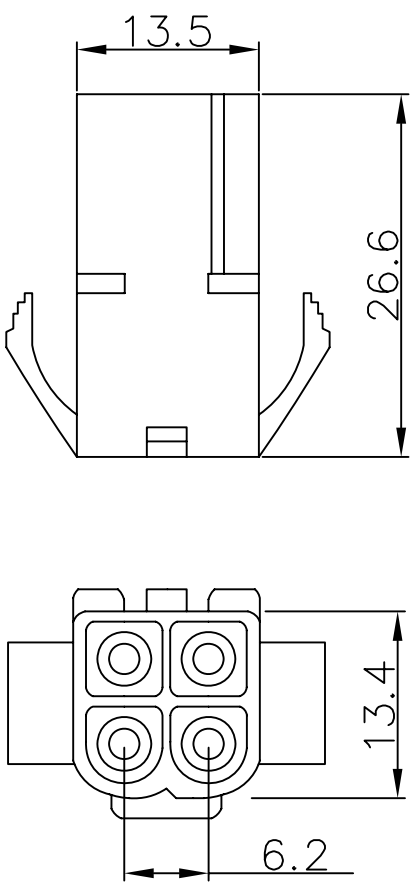

L-PE-2X02

SPECIFICATIONS

Circuit:1,2,3,4,6,9,12,15

Voltage rating:300V AC,DC

Current rating:12A AC,DC

Withstanding voltage:1500V AC/minute

Insulation resistance:1000M OHM min

Temperature range:-25 C~+90 C

Material:UL94V-2 nylon 66

RoHS Compliant

MORETHANALL PCB CONNECTORS Cable ASSEMBLIES

煜倫股份有限公司

www.morethanall.com

DRAWING BY CY		TOLERANCES ARE
CHECKED BY GENIUS		X. ±
UNIT / mm	SCALE 1 : 1	.X ±
		.XX ±
DATE		.XXX ±
		ANG ±
SIZE A4	PPOJECTION	

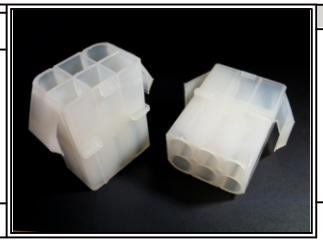

ORDER INFORMATION

L-PE-2Xxx-LF

SERIES

EAR MALE

2X02:04 WAY
2X03:06 WAY

LEADFREE

DESCRIPTION: