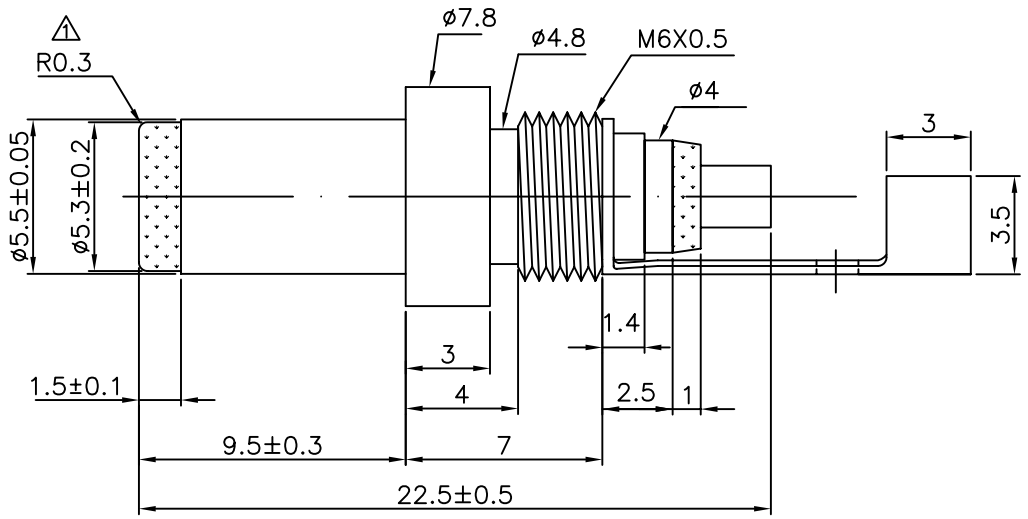

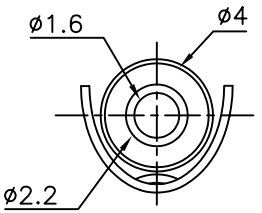

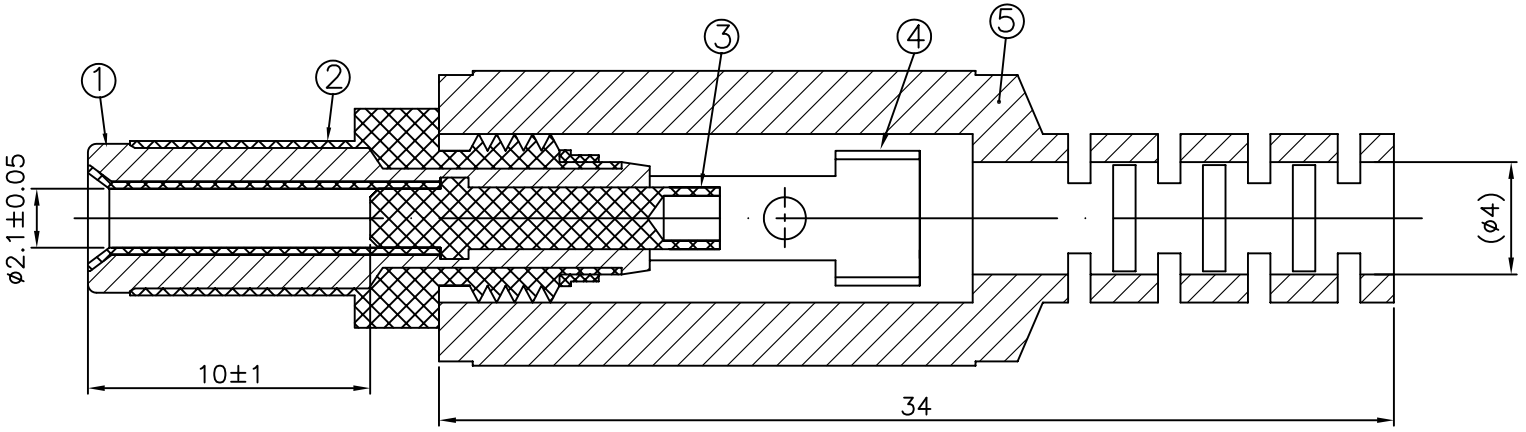

NO	CONTENT
5	PVC BLACK
4	BRASS NICKEL
3	BRASS NICKEL
2	BRASS NICKEL
1	POM BLACK

RoHS Compliant

MORETHANALL
PCB CONNECTORS
Cable ASSEMBLIES
煜倫股份有限公司
www.morethanall.com

DRAWING BY CY	
CHECKED BY GENIUS	
UNIT / mm	SCALE 1 : 1
DATE	
SIZE A4	PPOJECTION

TOLERANCES ARE
X. ±
.X ±
.XX ±
.XXX ±
ANG ±

ORDER INFORMATION

DCP-A-5521-LF
SERIES
ASSEMBLY
OD:5.5Ø
ID:2.1Ø
LEADFREE

DESCRIPTION: *DC PLUG ø5.5Xø2.1X9.5L*