SCHEMATIC	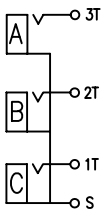	
COLOR	A	
	B	
	C	

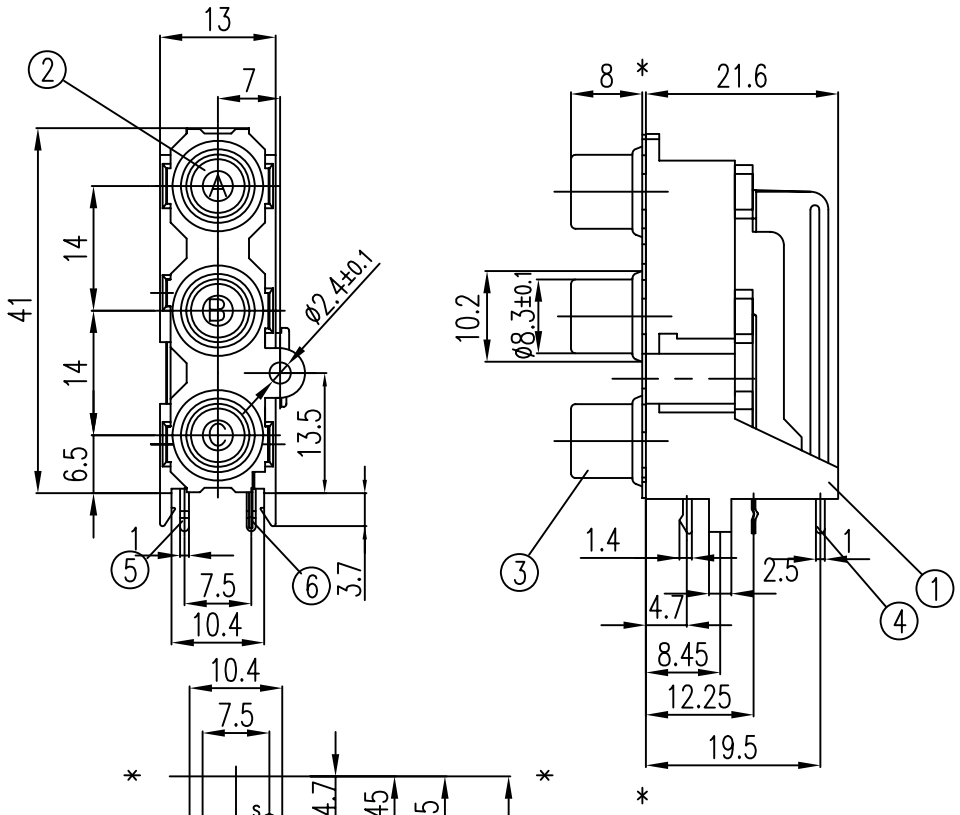

T:1.6 Dimensions of PC board holes

Tolerance : ±0.1(Printed-side view)

UNLESS OTHERWISE SPECIFIED, TOLERANCE ON DECIMAL: ±0.3

LTR	PART NAME	QTY	MATERIAL	REMARK
6	TERMINAL	1	C2680 t=0.4	MB:Cu Cu/Sn PLATED
5	TERMINAL	1	C2680 t=0.4	MB:Cu Cu/Sn PLATED
4	TERMINAL	1	C2680 t=0.4	MB:Cu Cu/Sn PLATED
3	OUTER CONTACT	1	C2680 t=0.4	MB:Cu Cu/Sn PLATED
2	WASHER	3	PBT	UL-94V0
1	HOUSING	1	PBT	UL-94V0

RoHS Compliant

MORETHANALL PCB CONNECTORS Cable ASSEMBLIES

煜倫股份有限公司

www.morethanall.com

DRAWING BY CY	
CHECKED BY GENIUS	
UNIT / mm	SCALE 1 : 1
DATE	
SIZE A4	PPOJECTION

TOLERANCES ARE

X. ±
.X ±
.XX ±
.XXX ±
ANG ±

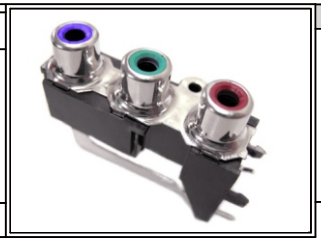

ORDER INFORMATION

RCAB1-JR47E1xxx-04-LF

SERIES
JACK
DIP90°
EAR 4.7mm
COLOR A.B.C
PGR:PURPLE/GREEN/RED
04WAY
LEADFREE

DESCRIPTION: PIN JACK