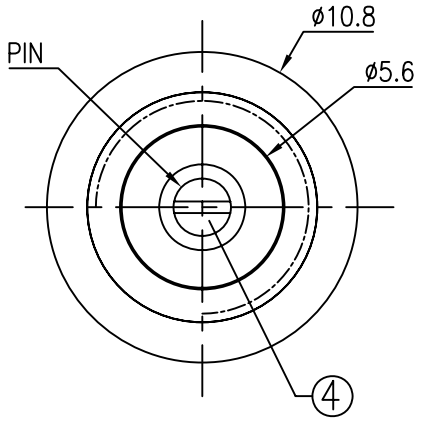

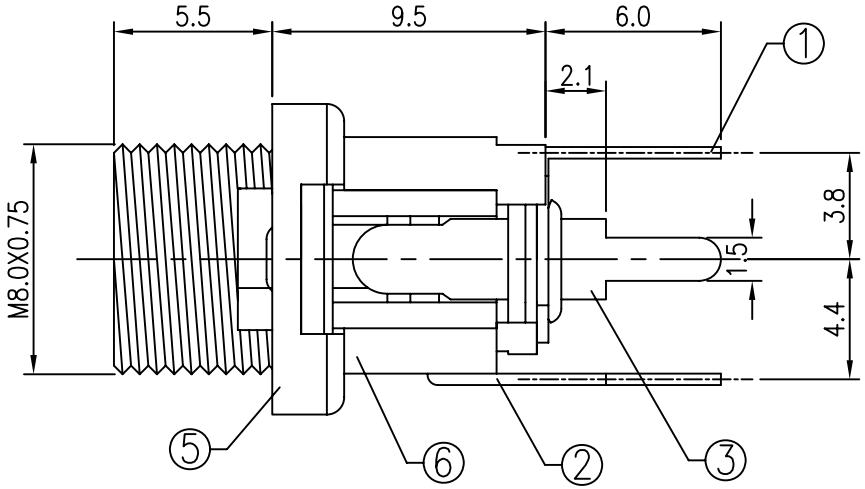

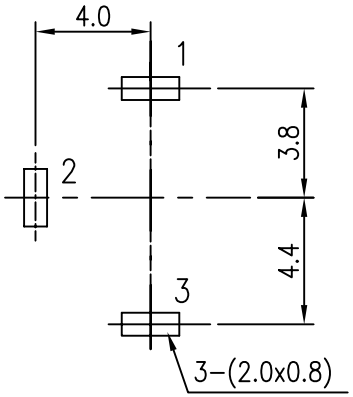

CAT. NO.	PIN	SCHEMATIC
DCJ-DPBT5-20	ø2.0	1 3
DCJ-DPBT5-25	ø2.5	2

LTR	PART NAME	QTY	MATERIAL	REMARK
6	HOUSING	1	PA66	
5	AXIS SUPPORT	1	H59 BRASS	MB:Cu Ni PLATED
4	PIN	1	H59 BRASS	MB:Cu Ni PLATED
3	SPRING	1	PHOSPHOR BRONZE	MB:Cu Cu/Sn PLATED
2	CURVE PIECE	1	PHOSPHOR BRONZE	MB:Cu Cu/Sn PLATED
1	FLAT PIECE	1	H62 BRASS	MB:Cu Cu/Sn PLATED

T:1.6 Dimensions of PC board holes

Tolerance : ±0.1(Printed-top view)

UNLESS OTHERWISE SPECIFIED, TOLERANCE ON DECIMAL: ±0.3

RoHS Compliant

MORETHANALL PCB CONNECTORS Cable ASSEMBLIES

煜倫股份有限公司

www.morethanall.com

DRAWING BY CY	
CHECKED BY GENIUS	
UNIT / mm	SCALE 1 : 1
DATE	
SIZE A4	PPOJECTION

TOLERANCES ARE
X. ±
.X ±
.XX ±
.XXX ±
ANG ±

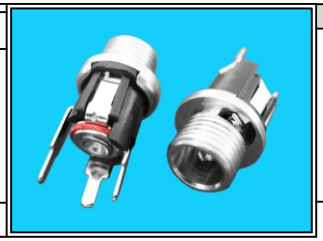

ORDER INFORMATION

DCJ-DPBT5-xx-LF

SERIES
DIP 180°
BACK PANEL
THREAD 5.6mm
20:2.0Ø
25:2.5Ø
LEADFREE

DESCRIPTION: DC POWER JACK