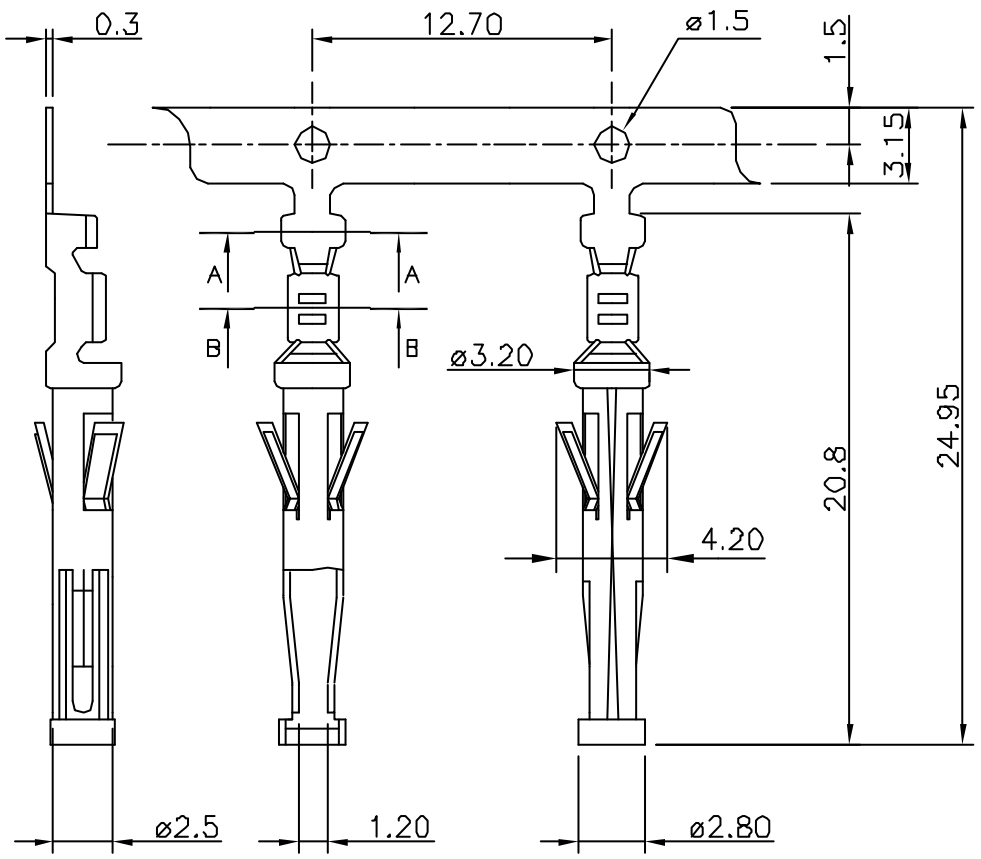

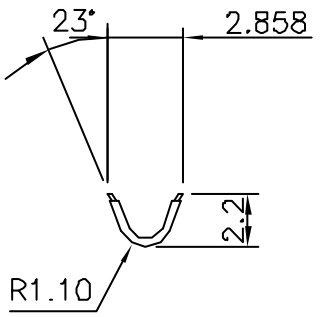

A–A SEC.

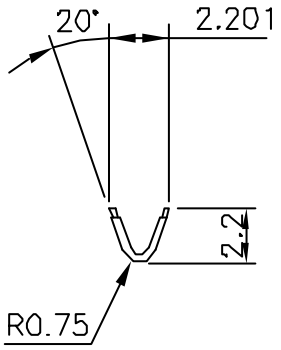

B–B SEC.

MECHANICAL

CONTACT
Phosphor bronze

WIRE SIZE
AWG 24 or 26 or 28 spacinged

ELECTRICAL

CURRENT RATING
7 Amp

CONTACT RESISTANCE
10mΩ Max. mated

TERMINAL

Phosphor bronze
Gold plated 2–3 over nickel

RoHS Compliant

MORETHANALL
PCB CONNECTORS
Cable ASSEMBLIES
煜倫股份有限公司
www.morethanall.com

DRAWING BY CY		TOLERANCES ARE
CHECKED BY GENIUS		X. ±
UNIT / mm	SCALE 1 : 1	.X ±
DATE		.XX ±
		.XXX ±
		ANG ±
SIZE A4	PPOJECTION	

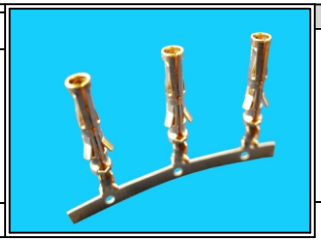

ORDER INFORMATION

V35-F-24-LF

SERIES
FEMALE TERMINAL
24~28 AWG
LEADFREE

DESCRIPTION: