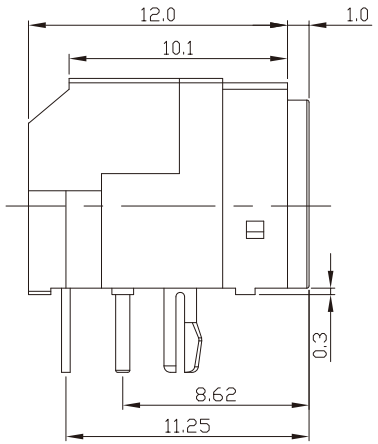

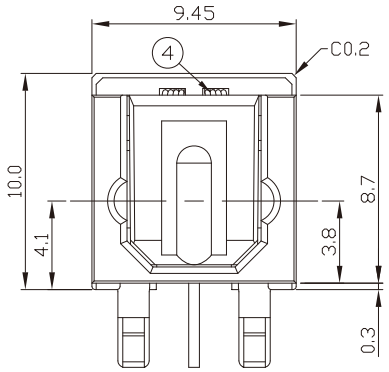

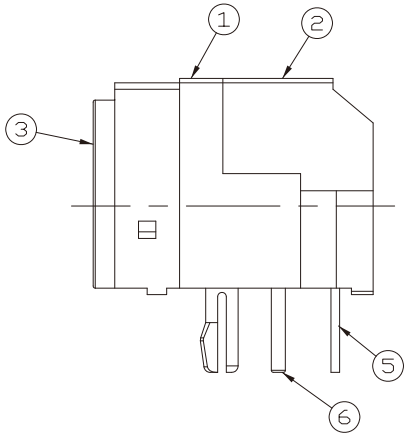

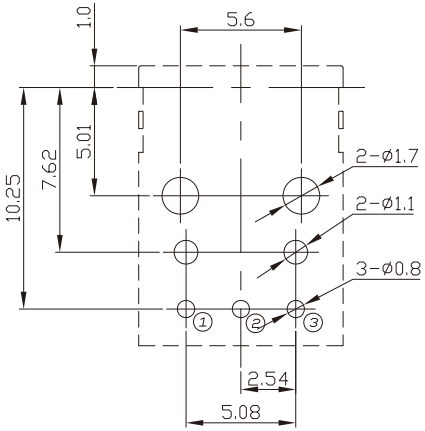

(TOL:±0.1)
(PCB t=1.6)
PCB LAYOUT
BOTTOM VIEW

Receiver	
1	Vcc
2	GND
3	Vout

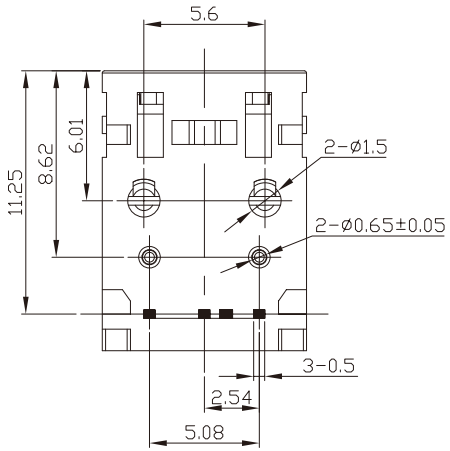

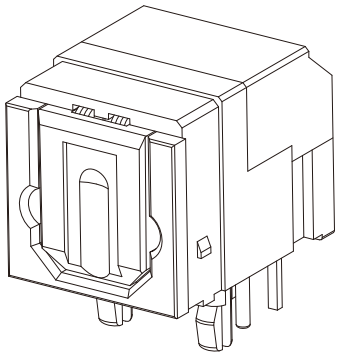

NO	PART NAME	Q'TY	MATERIAL	PLATED	REMARK
6	PLUG	1	COPPER ALLOY BAR	Sn	
5	IC(RECEIVER)	1			
4	SPRING	1	SWPA		BLACK
3	COVER	1	PA46		BLACK
2	BACK COVER	1	PA46		BLACK
1	HOUSING	1	PA46		BLACK

RoHS Compliant

MORETHANALL
PCB CONNECTORS
Cable ASSEMBLIES
煜倫股份有限公司
www.morethanall.com

DRAWING BY CY	
CHECKED BY GENIUS	
UNIT / mm	SCALE 1 : 1
DATE	
SIZE A4	PPOJECTION

TOLERANCES ARE
X. ± 0.50
.X ± 0.30
.XX ± 0.15
.XXX ±
ANG ±

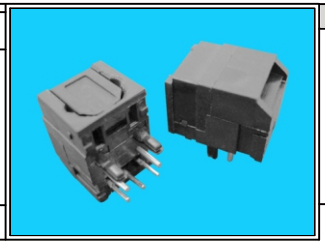

ORDER INFORMATION

POF-JRPS-R03-LF

SERIES
JACK
DIP 90°
POST
SHUNT DOOR
RX 3PIN
LEADFREE

DESCRIPTION: