NOTE:

CAVITY CONFIRMS TO FCC RULES AND REGULATIONS PART 68, SUBPART F.

1. MATERIAL:
   HOUSING: PBT OR PA46, WITH GLASS FIBER, UL 94V-0, STANDARD COLOR-BLACK.
   CONTACTS: PHOSPHOR BRONZE.

2. FINISH:
   CONTACTS: GOLD PLATED ON CONTACT AREA, 0.0254μm [1μ"] GOLD PLATED ON SOLDER TAIL, WITH ENTIRE CONTACT UNDERPLATED 1.27μm [50μ"] MIN. NICKEL.

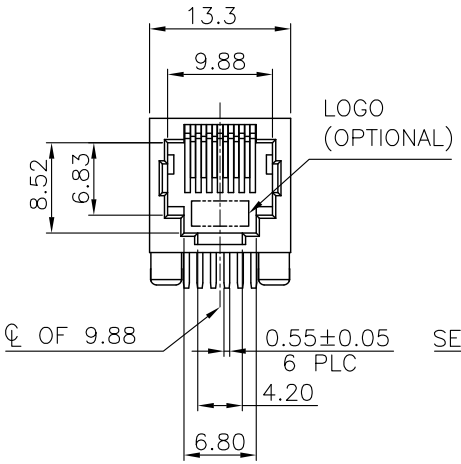

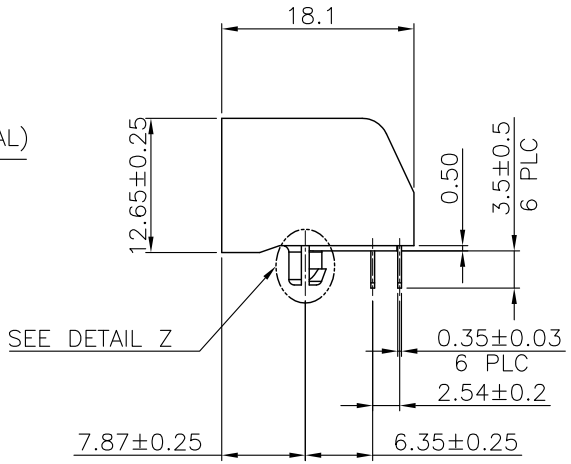

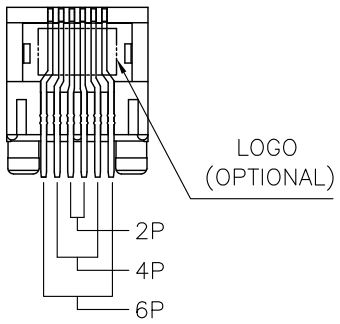

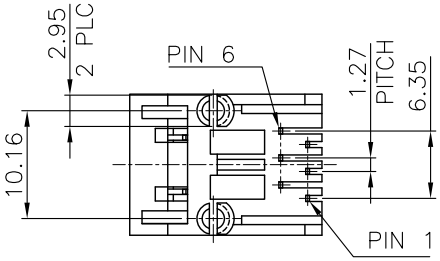

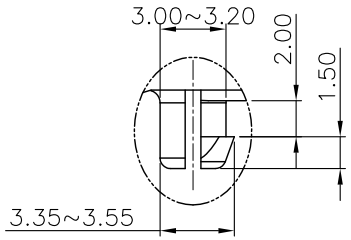

DETAIL Z
SCALE 2:1

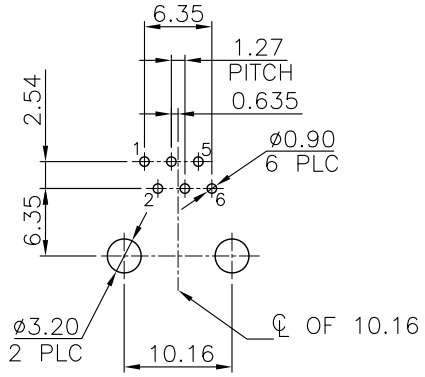

RECOMMENDED PCB LAYOUT

RECOMMENDED PCB THICKNESS: 1.6mm
TOLERANCE: ±0.05 (TOP VIEW)

RoHS Compliant

MORETHANALL
PCB CONNECTORS
Cable ASSEMBLIES
煜倫股份有限公司
www.morethanall.com

DRAWING BY CY		TOLERANCES ARE
CHECKED BY GENIUS		X. ±
UNIT / mm	SCALE 1 : 1	.X ± 0.25
		.XX ± 0.13
DATE		.XXX ± 0.05
		ANG ±
SIZE A4	PPOJECTION	

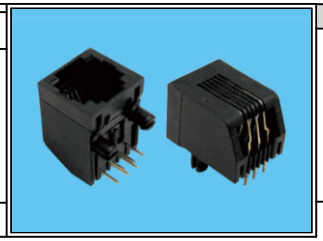

ORDER INFORMATION

MJ12J-KX06-0606-LF

- SERIES
- BLACK
- NON EAR
- 06u" GOLD
- 6P6C
- LEADFREE

DESCRIPTION: 6POSITION, FLANGED, DIP, SIDE ENTRY PCB JACK