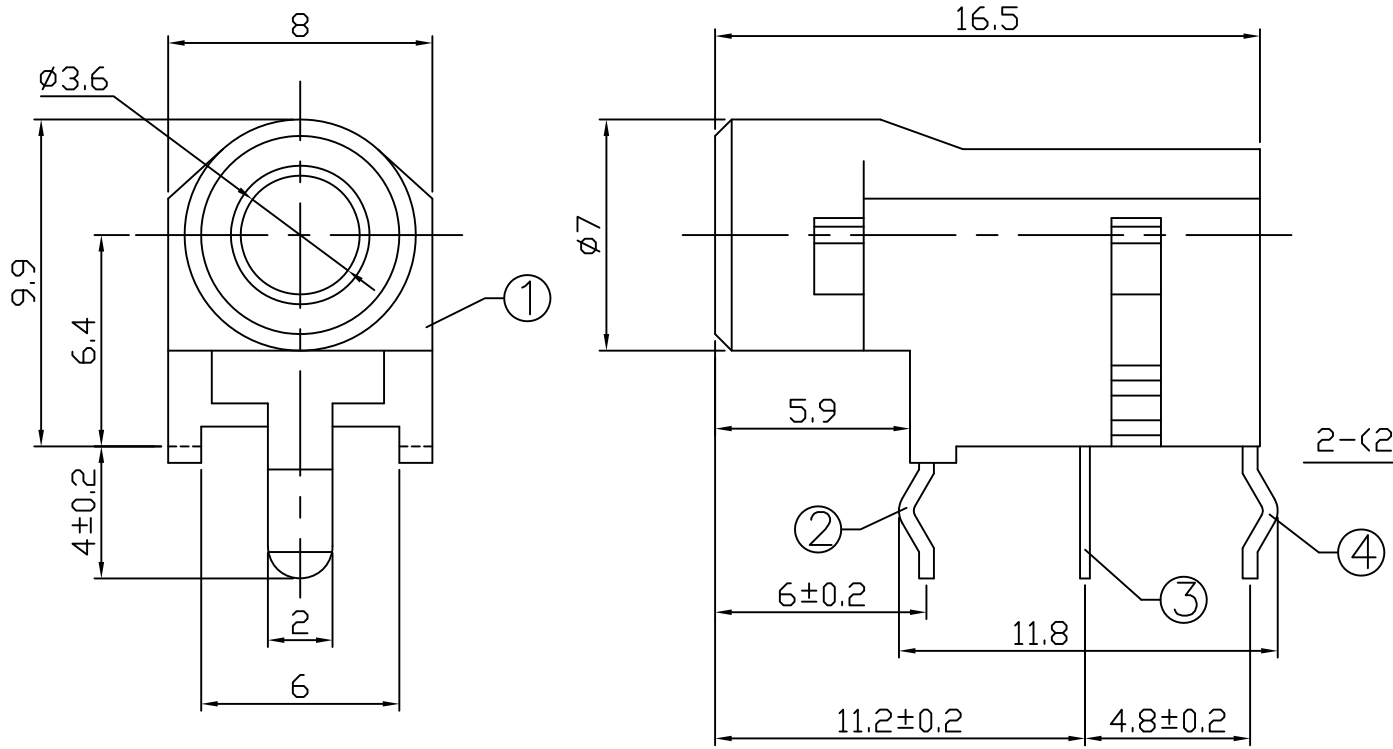

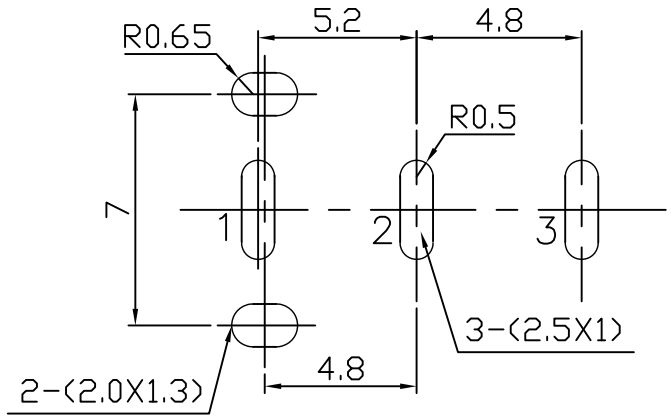

T:1.6 Dimensions of PC board holes

Tolerance : ±0.1(Printed-top view)

MODEL NO.	COLOR
PJ-R04GR-03	GREEN
PJ-R04RD-03	RED
PJ-R04BL-03	BLUE
PJ-R04OR-03	ORANGE

SCHEMATIC

PJ-R04xx-03

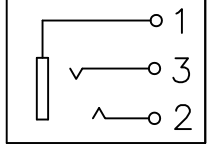

UNLESS OTHERWISE SPECIFIED, TOLERANCE ON DECIMAL: ±0.3

LTR	PART NAME	QTY	MATERIAL	REMARK
4	3# CONTACT FOOT	1	C5191 t=0.5	MB:Cu Ag PLATED
3	2# CONTACT FOOT	1	C5191 t=0.25	MB:Cu Ag PLATED
2	1# CONTACT FOOT	1	C2680 t=0.5	MB:Cu Ag PLATED
1	HOUSING	1	PBT 4815	UL-94V-0

RoHS Compliant

MORETHANALL PCB CONNECTORS Cable ASSEMBLIES

煜倫股份有限公司

www.morethanall.com

DRAWING BY CY		TOLERANCES ARE
CHECKED BY GENIUS		X. ±
UNIT / mm	SCALE 1 : 1	.X ±
		.XX ±
DATE		.XXX ±
		ANG ±
SIZE A4	PPOJECTION	

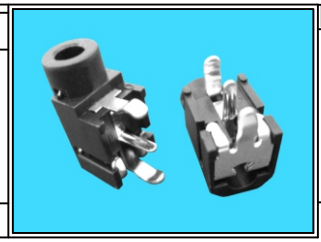

ORDER INFORMATION

PJ-R04xx-03-LF

SERIES

DIP 90°

4.0mm

COLOR

03 WAY

LEADFREE

DESCRIPTION: