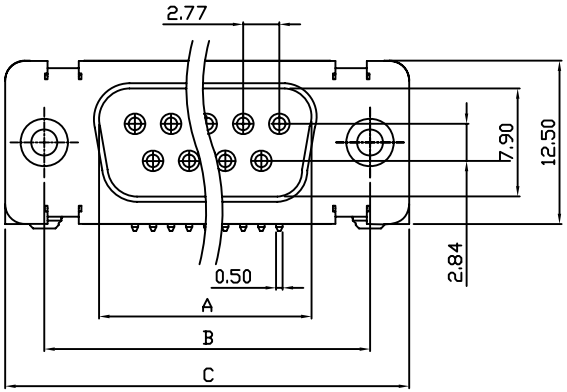

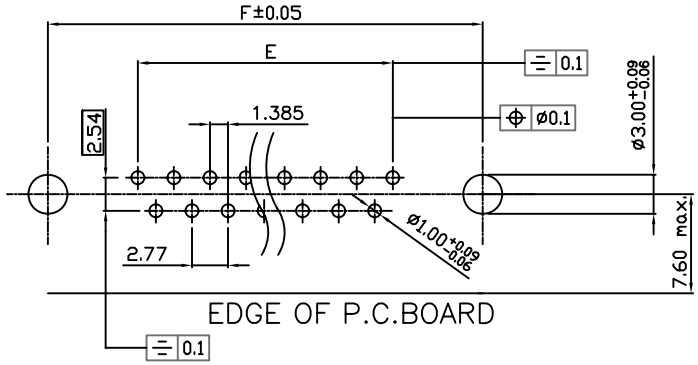

P.C.B. LAYOUT PATTERN

SPECIFICATION
MATERIAL
Insulator: PA–6, rated UL94V–0
Contacts: Brass
Shell: Steel
Rivet,Boardlock: Copper alloy
CONTACT PLATING
Underplate: 50m" Nickel
Contact area: 3m" Selective gold
Solder tails area: 100m" Tin/Lead
ELECTRICAL
Operation voltage: 250 VAC max.
Current rating: 3 Amps
Contact resistance: 25 mohms
Insulation resistance: 3000 Mohms min @ 500 VDC
Dielectric withstanding voltage: 1000 VAC / minute
Operating temperature: –55ΓXC TO +105ΓXC

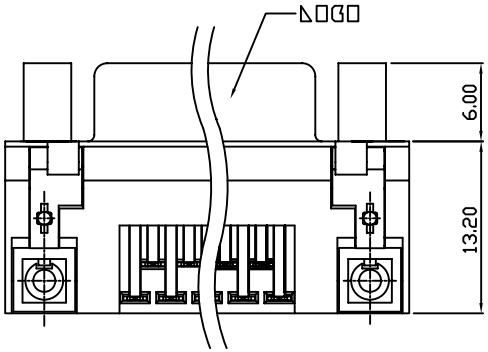

BOTTOM SIDE

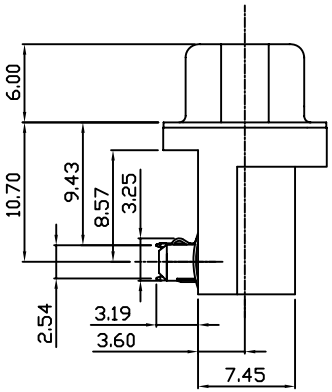

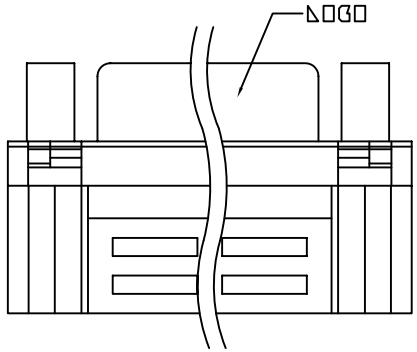

TOP SIDE

POSITION	A	B	C	E	F
DRP–SJ–09	16.35	25.00	31.0	11.08	25.00
DRP–SJ–15	24.70	33.30	39.3	19.39	33.30
DRP–SJ–25	38.40	47.04	53.1	33.24	47.04
DRP–SJ–37	54.80	63.50	69.5	49.86	63.50

RoHS Compliant

MORETHANALL PCB CONNECTORS Cable ASSEMBLIES
煜倫股份有限公司
www.morethanall.com

DRAWING BY CY	
CHECKED BY GENIUS	
UNIT / mm	SCALE 1 : 1
DATE	
SIZE A4	PPOJECTION

TOLERANCES ARE
X. ±
.X ± 0.30
.XX ± 0.20
.XXX ±
ANG ±

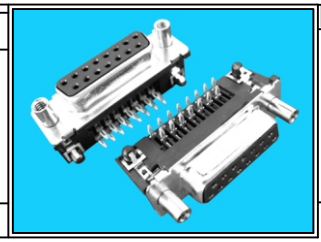

ORDER INFORMATION

DRP-SJ-xx-LF
SERIES
FEMALE
JACKSCREW
09~37 WAY
LEADFREE

DESCRIPTION: D–SUB 90 right angled press fit