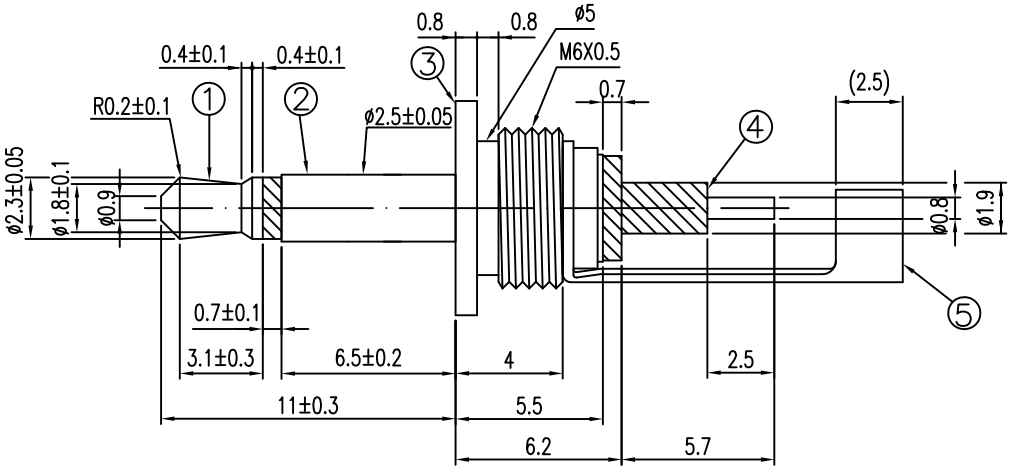

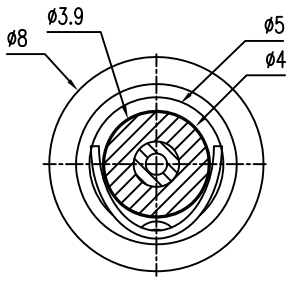

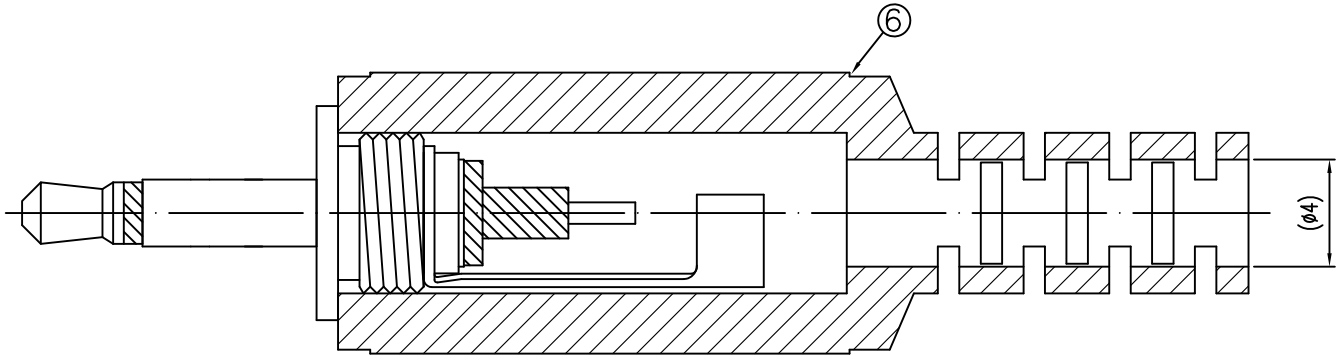

NO	CONTENT
6	TPR BLACK
5	BRASS NICKEL
4	PP BLACK
3	BRASS NICKEL
2	BRASS NICKEL
1	BRASS NICKEL

RoHS Compliant

MORETHANALL PCB CONNECTORS Cable ASSEMBLIES

煜倫股份有限公司

www.morethanall.com

DRAWING BY CY	
CHECKED BY GENIUS	
UNIT / mm	SCALE 1 : 1
DATE	
SIZE A4	PPOJECTION

TOLERANCES ARE
X. ±
.X ±
.XX ±
.XXX ±
ANG ±

ORDER INFORMATION

EP-A-02-LF

SERIES | 02WAY ASSEMBLY | LEADFREE

DESCRIPTION: *2.5MP Assy type*