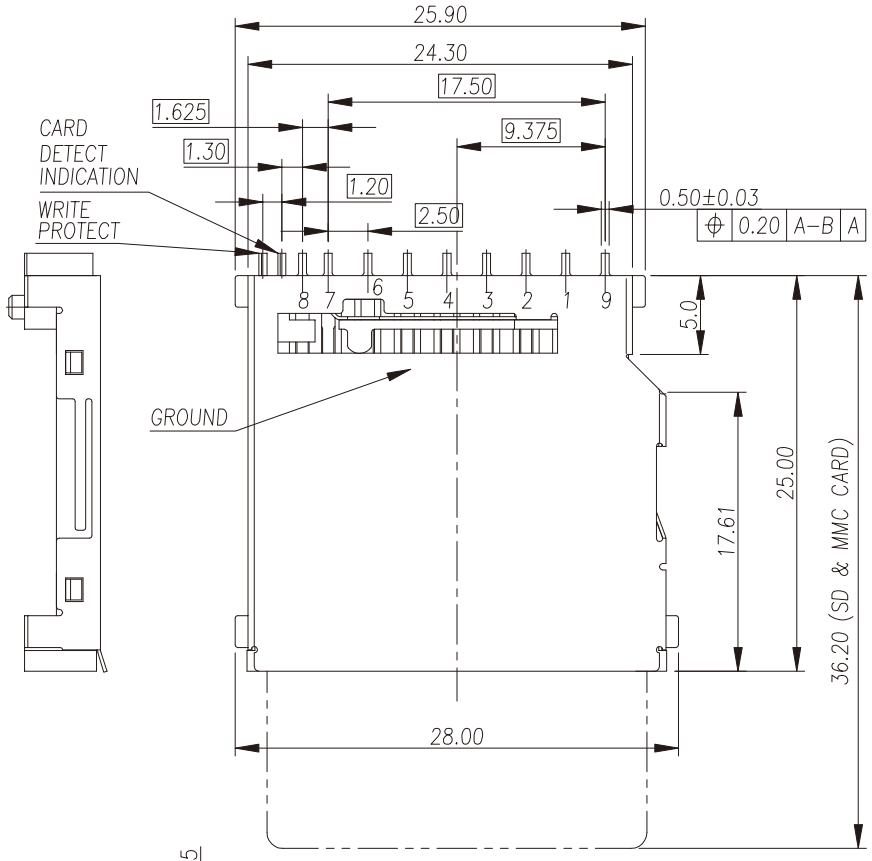

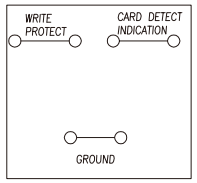

WITHOUT CARD

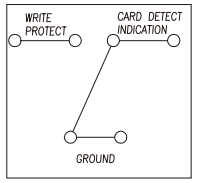

CARD INSERTED
WRITE PROTECT : LOCK

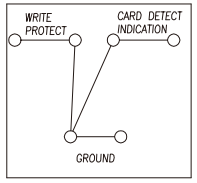

CARD INSERTED
WRITE PROTECT : UNLOCK

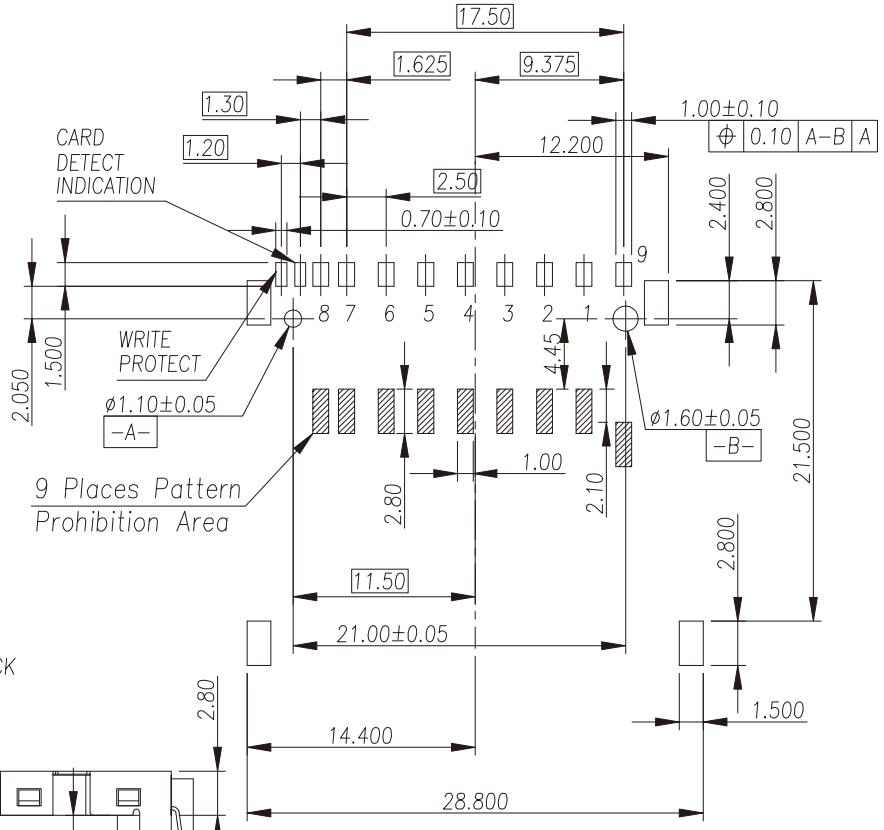

PC BOARD LAYOUT COMPONENT SIDE

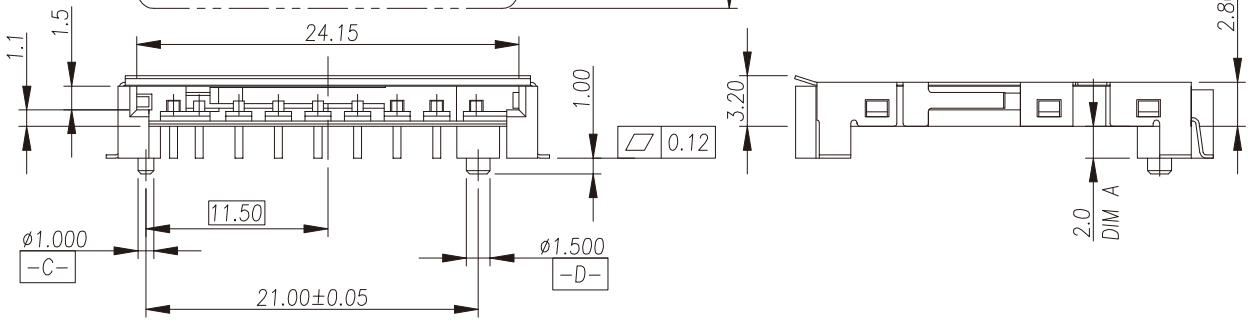

RoHS Compliant

MORETHANALL
PCB CONNECTORS
Cable ASSEMBLIES
煜倫股份有限公司
www.morethanall.com

DRAWING BY CY		TOLERANCES ARE
CHECKED BY GENIUS		X. ±
UNIT / mm	SCALE 1 : 1	.X ±
		.XX ±
		.XXX ±
DATE		ANG ±
SIZE A4	PPOJECTION	

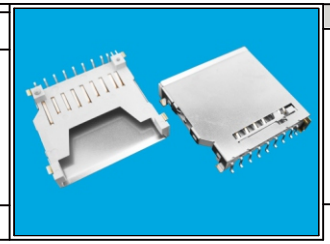

ORDER INFORMATION

SDC-W21X220-09-LF

- SERIES
- 90°SMT
- POST 21.00mm
- LONG BODY
- 2.0mm STANDOFF
- 09WAY
- LEADFREE

DESCRIPTION: SECURE DIGITAL MEMORY CARD CONNECTOR (OPEN SHELL,P/C)TYPE C (DIM A=2.0mm)