CIRCUITS	DIM A	DIM B	DIM C	備註 REMARK (有極)	REMARK (無極)
10	3.20	6.00	4.80		
12	4.00	6.80	5.60		
14	4.80	7.60	6.40		
16	5.60	8.40	7.20		
18	6.40	9.20	8.00		
20	7.20	10.00	8.80		
22	8.00	10.80	9.60		
24	8.80	11.60	10.40		
26	9.60	12.40	11.20		
28	10.40	13.20	12.00		
30	11.20	14.00	12.80		
32	12.00	14.80	13.60		
34	12.80	15.60	14.40		
36	13.60	16.40	15.20		
40	15.20	18.00	16.80		
50	19.20	22.00	20.80		
60	23.20	26.00	24.80		
70	27.20	30.00	28.80		
80	31.20	34.00	32.80		
90	35.20	38.00	36.80		
100	39.20	42.00	40.80		

SPECIFICATIONS

Current Rating:	0.5 Amps
Insulator resistance:	100 Megohms Min.
Contact resistance:	70 m ohm Max.
Dielectric withstanding:	AC 500 V
Operating Temperature:	−40° − +85°C
Contact Material:	Phosphor bronze
Insulator Material:	High Temperature Thermoplastic,UL 94V−0
Color :	Natural
Finish:	Gold all over nickel

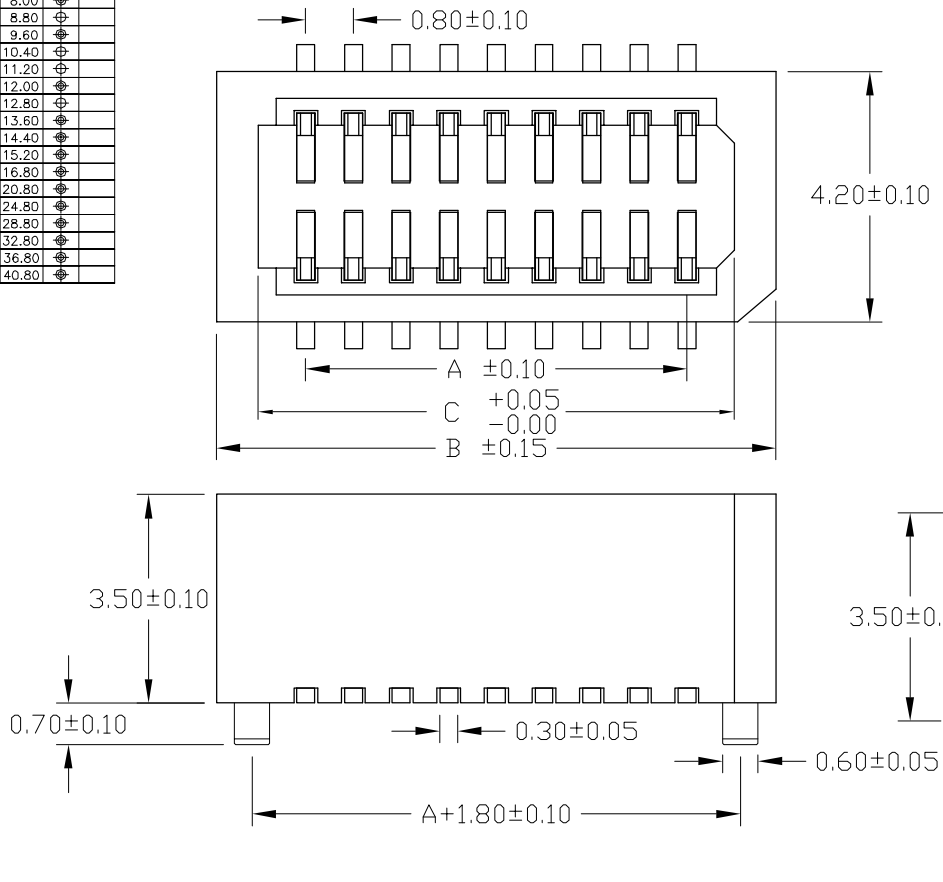

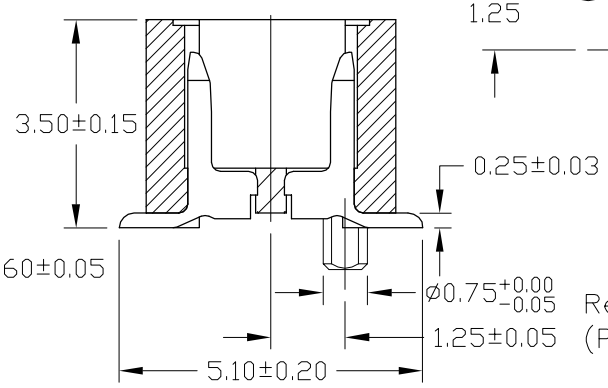

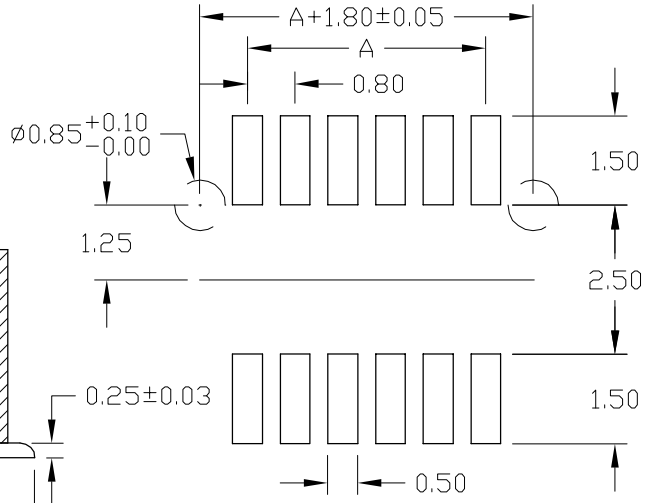

Recommended PCB Layout
(PCB TOLERANCE ±0.05)

MORETHANALL CONNECTORS ASSEMBLIES

煜倫有限公司

PART NO. ZV08-P35P-xxx			
DWG NO. ZV08-P35P-xxx	CHECKED BY CY	TOLERANCES ARE .X ± .XX ± .XXX ± AWG	DESCRIP TION: 0.8mm Board To Board Socket
FILE NO.	DRAWING BY		
UNIT / mm	SCALE 1 : 1	PROJECTION	AREA / REVISIONS / HK / DATE