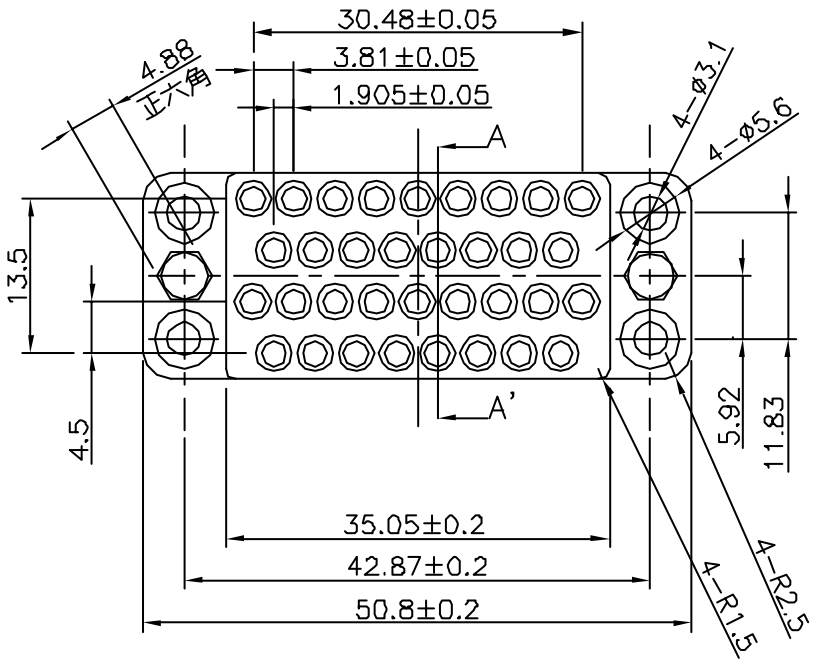

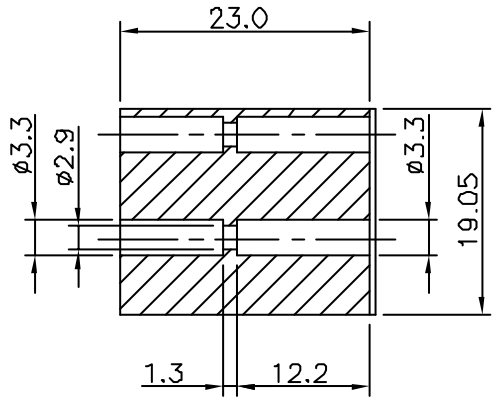

DETAIL A–A'

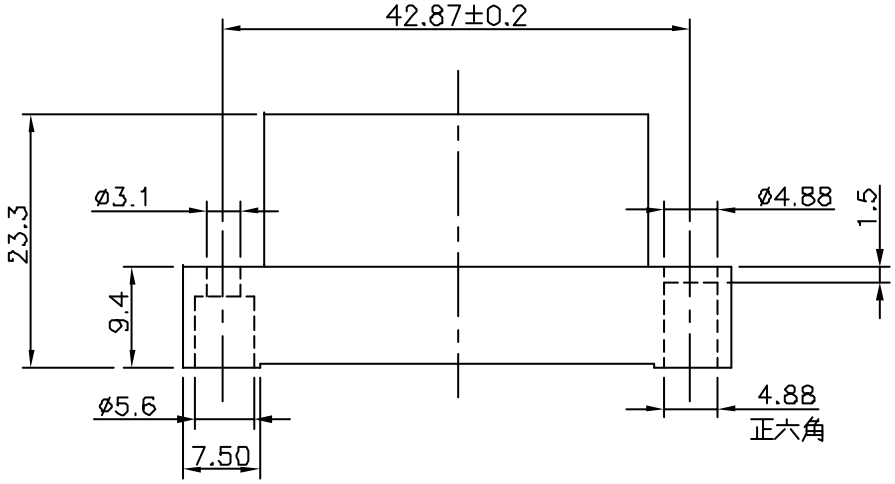

MECHANICAL

INSULATOR MATERIAL:

PBT & Glass–fibre reinforced
UL–94–V0

ELECTRICAL

INSULATION RESISTANCE:

1000MΩ Min.(at 500V DC)

WORKING TEMPERATURE:

–55° C to +105° C

RoHS Compliant

MORETHANALL
PCB CONNECTORS
Cable ASSEMBLIES
煜倫股份有限公司
www.morethanall.com

DRAWING BY CY		TOLERANCES ARE
CHECKED BY GENIUS		X. ±
UNIT / mm	SCALE 1 : 1	.X ±
		.XX ±
DATE		.XXX ±
		ANG ±
SIZE A4	PPOJECTION	

照片框

ORDER INFORMATION

V35-PHA-34-LF

- SERIES
- MALE
- HOUSING
- A TYPE
- 34WAY
- LEADFREE

DESCRIPTION: V.35 INSULATOR MALE