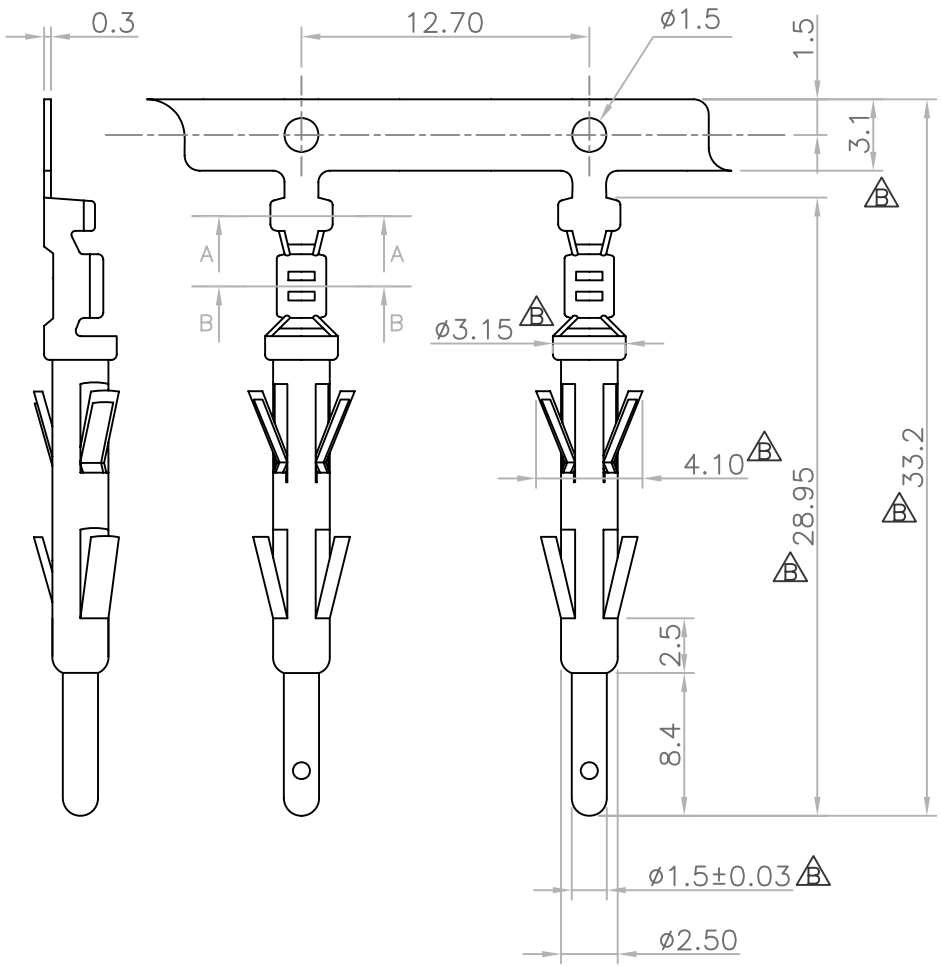

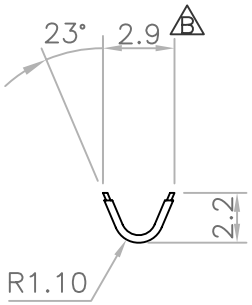

A–A SEC.

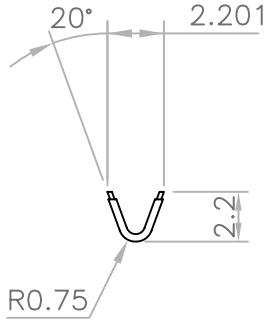

B–B SEC.

MEOHANICAL

CONTACT
Brass

WIRE SIZE
AWG 24 or 26 spacinged

ELECTRICAL

CURRENT RATING
7 Amp

CONTACT RESISTANCE
10mΩ Max. mated

TERMINAL

Phosphor bronze
Gold plated 2–3 over nickel

RoHS Compliant

MORETHANALL
PCB CONNECTORS
Cable ASSEMBLIES
煜倫股份有限公司
www.morethanall.com

DRAWING BY CY		TOLERANCES ARE
CHECKED BY GENIUS		X. ± .X ± 0.30 .XX ± 0.25 .XXX ± ANG ±
UNIT / mm	SCALE 1 : 1	
DATE		
SIZE A4	PPOJECTION	

照片框

ORDER INFORMATION

V35-M-24-LF
SERIES
24~26 AWG
MALE TERMINAL
LEADFREE

DESCRIPTION: V.35 TERMINAL (MALE)