- MATERIALS:(RoHS Compliant)

  Contacts Socket: Phosphor Bronze

  Contacts Pin: Brass

  Wire Size: 22~28Awg Crimp Contacts

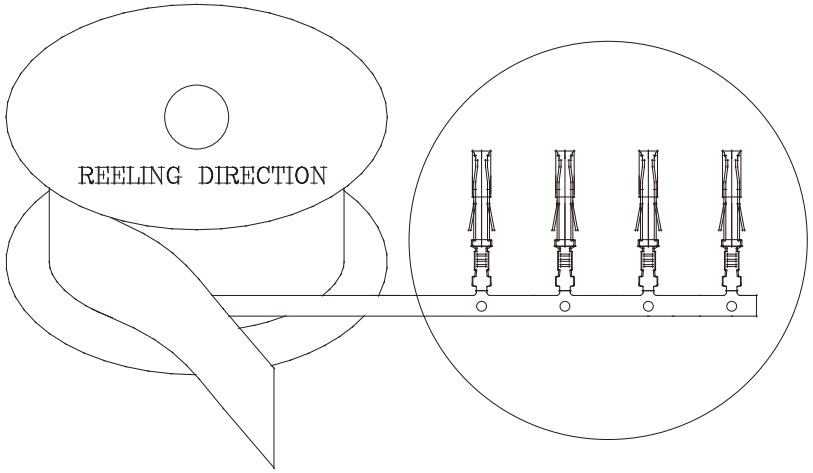

V.35 Socket Terminals

2500 Pins/reel

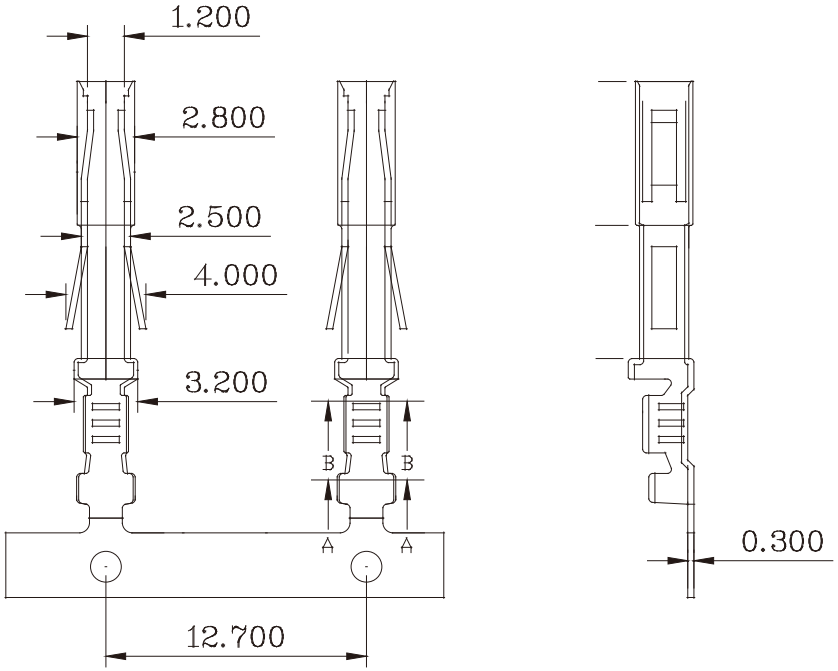

V.35 Socket Terminals

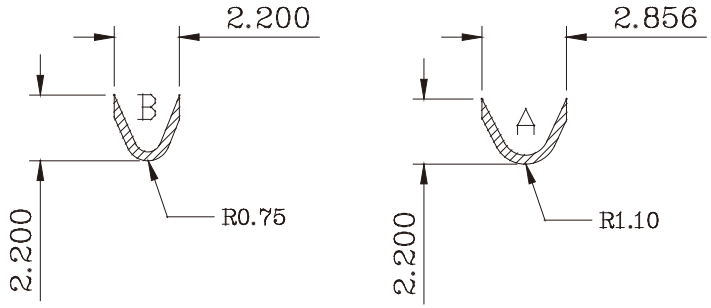

RoHS Compliant

MORETHANALL PCB CONNECTORS Cable ASSEMBLIES

煜倫股份有限公司

www.morethanall.com

DRAWING BY CY		TOLERANCES ARE
CHECKED BY GENIUS		X. ±
UNIT / mm	SCALE 1 : 1	.X ±
		.XX ±
DATE		.XXX ±
		ANG ±
SIZE A4	PPOJECTION	

照片框

ORDER INFORMATION

V35-F-22-LF

SERIES

FEMALE TERMINAL

22~28AWG

LEADFREE

DESCRIPTION: V.35 Series Connector Contact Precision Formed