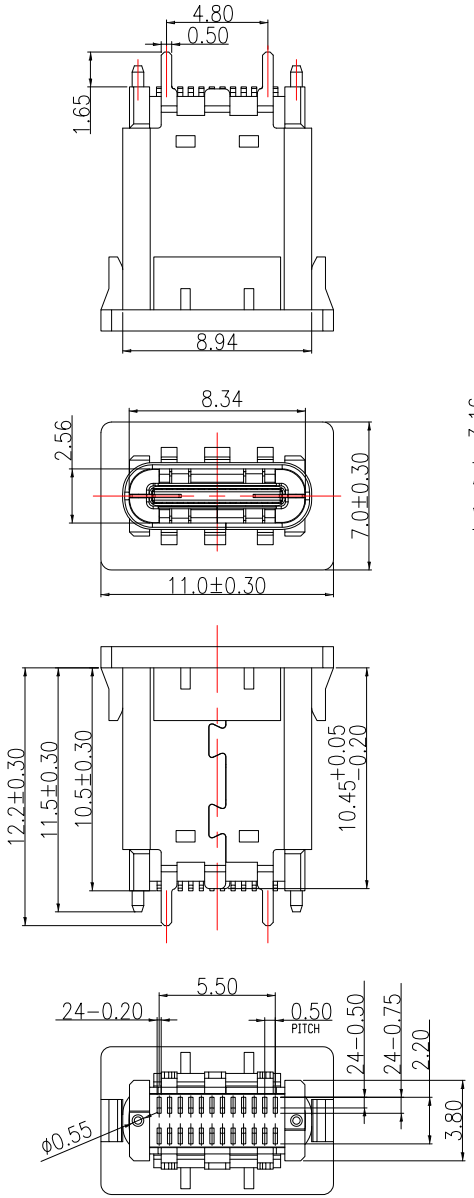

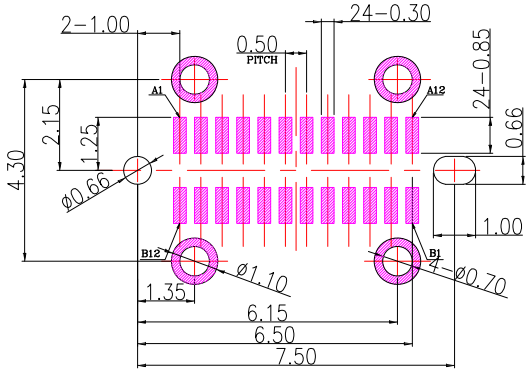

RECOMMENDED P.C.B. LAYOUT

SPECIFICATIONS

Electrical:

1.Rating: 3.0 A

2.Dielectric Withstand Voltage: 100V AC

3.Contact Resistance: 40 mΩ Max

4.Insulation Resistance: 100 MΩ Min

Mechanical:

1.Connector Mate and Unmate Force

1.1 Mate force: 5~20 N

1.2 Unmate force: 8~20 N

Material:

1.Housing: LCP UL 94V-0

2.Contact: Copper Alloy

3.Shell: SUS

Finish:

1.Contact: Plated Gold in Mating Area ;

Tin Plated on Solder Balls ;

Nickel under plated overall

2.Shell: Nickel under Plated surface layer

RoHS Compliant

MORETHANALL PCB CONNECTORS Cable ASSEMBLIES

煜倫股份有限公司

www.morethanall.com

DRAWING BY CY	
CHECKED BY GENIUS	
UNIT / mm	SCALE 1 : 1
DATE	
SIZE A4	PPOJECTION

TOLERANCES ARE

Up to 5	±0.2
Above 5 ~ 15	±0.3
Above 15 ~ 30	±0.4
Above 30 ~ 50	±0.5
Angle	±0.3°

照片框

ORDER INFORMATION

USB-SV10MPMXC-24C-LF

SERIES
FEMALE
180°SMT
HIGH 10,5mm
POST
METAL FOOT
NON SPRING
METAL FOOT
CAP
24 PIN C TYPE
LEADFREE

DESCRIPTION: USB 3.1 TYPE C 直立式 SMT L:10.5mm 外殼腳長1.65mm