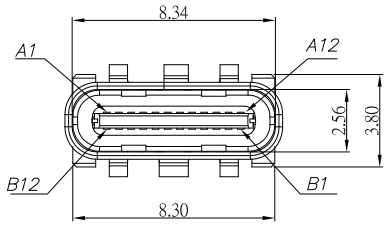

USB TYPE-C PIN ASSIGNMENTS

PIN NUMBER	SIGNAL NAME	PIN NUMBER	SIGNAL NAME
A1	GND	B12	GND
A2	SSTXp1	B11	SSRXp1
A3	SSTXn1	B10	SSRXn1
A4	VBUS	B9	VBUS
A5	CC1	B8	SBU2
A6	Dp1	B7	Dn2
A7	Dn1	B6	Dp2
A8	SBU1	B5	CC2
A9	VBUS	B4	VBUS
A10	SSRXn2	B3	SSTXn2
A11	SSRXp2	B2	SSTXp2
A12	GND	B1	GND

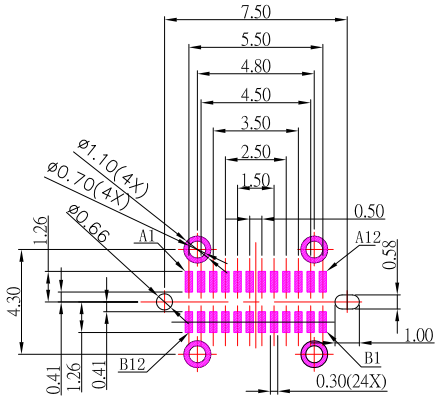

RECOMMENDED P.C.B. LAYOUT

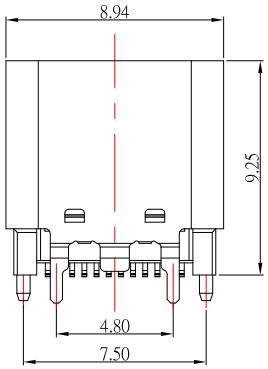

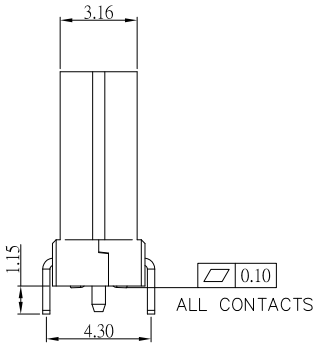

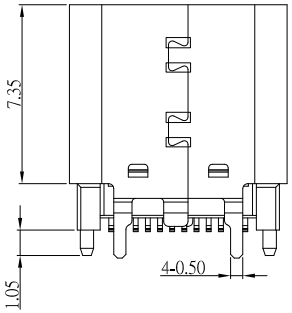

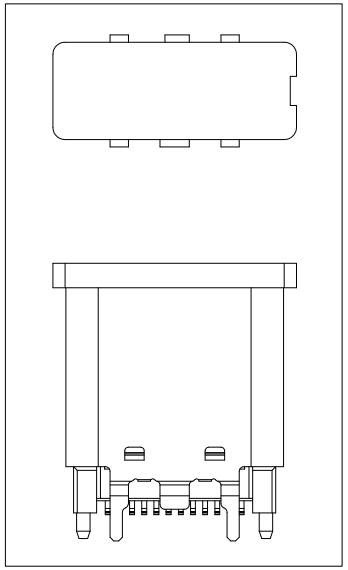

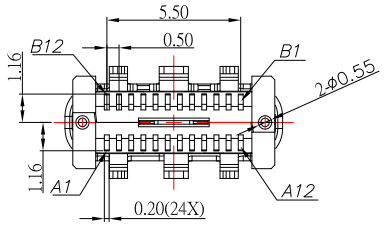

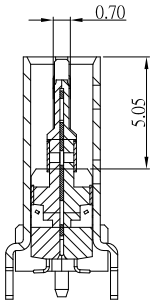

SECTION: A-A

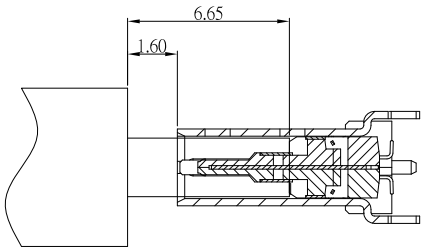

AFTER MATING

SPECIFICATIONS

Electrical:

1.Rating: 3.0 A , 5.0V

2.Dielectric Withstand Voltage: 100V AC

3.Contact Resistance: 40 mΩ Max

4.Insulation Resistance: 100 MΩ Min

Mechanical:

1.Connector Mate and Unmate Force

1.1 Mate force: 5~20 N

1.2 Unmate force: 8~20 N

Material:

1.Housing: LCP

2.Contact: C7025

3.Shell: SUS

Finish:

1.Contact: Plated Gold in Mating Area ;

Tin Plated on Solder Balls ;

Nickel under plated overall

2.Shell: Nickel under Plated surface layer

RoHS Compliant

MORETHANALL PCB CONNECTORS Cable ASSEMBLIES

煜倫股份有限公司

www.morethanall.com

DRAWING BY CY	
CHECKED BY GENIUS	
UNIT / mm	SCALE 1 : 1
DATE	
SIZE A4	PPOJECTION

TOLERANCES ARE

Up to 5	±0.2
Above 5 ~ 15	±0.3
Above 15 ~ 30	±0.4
Above 30 ~ 50	±0.5
Angle	±0.3°

照片框

ORDER INFORMATION

USB-SV09MPMXCR-24C-LF

SERIES
FEMALE
180°SMT
HIGH 9.2mm
METAL FOOT
POST
METAL FOOT
NON SPRING
CAP
REEL
24 PIN C TYPE
LEADFREE

DESCRIPTION: USB 3.1 TYPE C 直立式 SMT L:9.25 mm

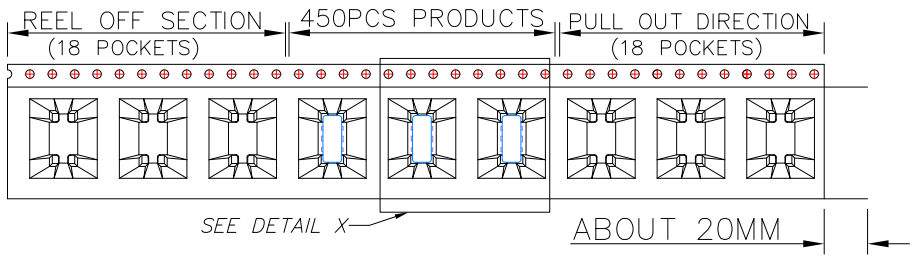

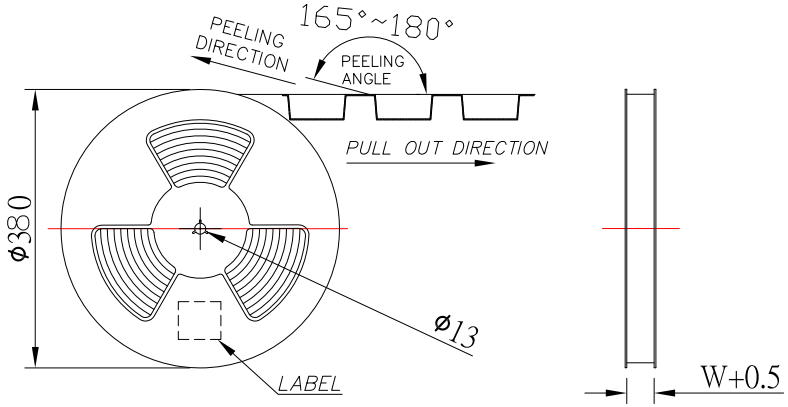

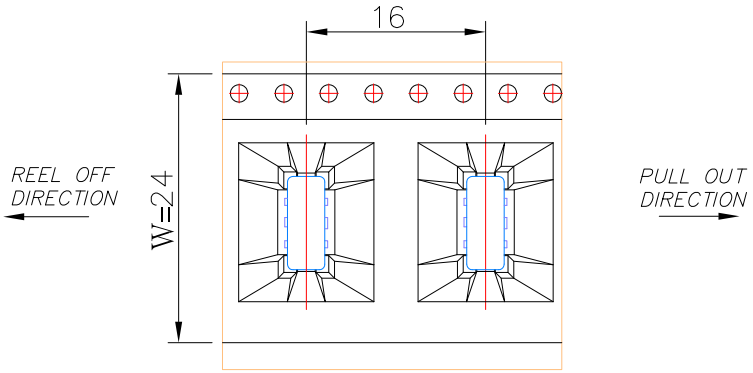

DETAIL X

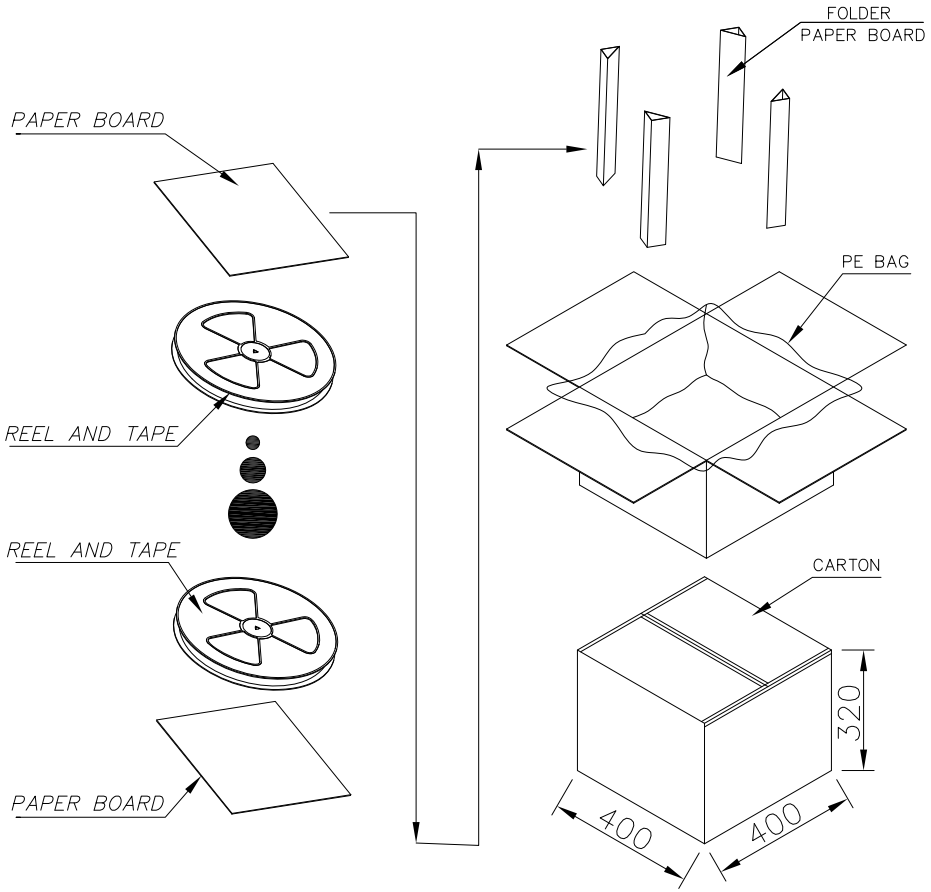

	REEL/TRAY	CARTON	外箱尺寸
CONNECTOR (PCS)	450	4500	L=400mm*W=400mm*H=320mm

RoHS Compliant

MORETHANALL PCB CONNECTORS Cable ASSEMBLIES

煜倫股份有限公司

www.morethanall.com

DRAWING BY CY	
CHECKED BY GENIUS	
UNIT / mm	SCALE 1 : 1
DATE	
SIZE A4	PPOJECTION

TOLERANCES ARE

Up to 5	±0.2
Above 5 ~ 15	±0.3
Above 15 ~ 30	±0.4
Above 30 ~ 50	±0.5
Angle	±0.3°

照片框

ORDER INFORMATION

USB-SV09MPMXCR-24C-LF

- SERIES
- FEMALE
- 180°SMT
- HIGH 9.2mm
- METAL FOOT
- POST
- METAL FOOT
- NON SPRING
- CAP
- REEL
- 24 PIN C TYPE
- LEADFREE

DESCRIPTION: PACKING