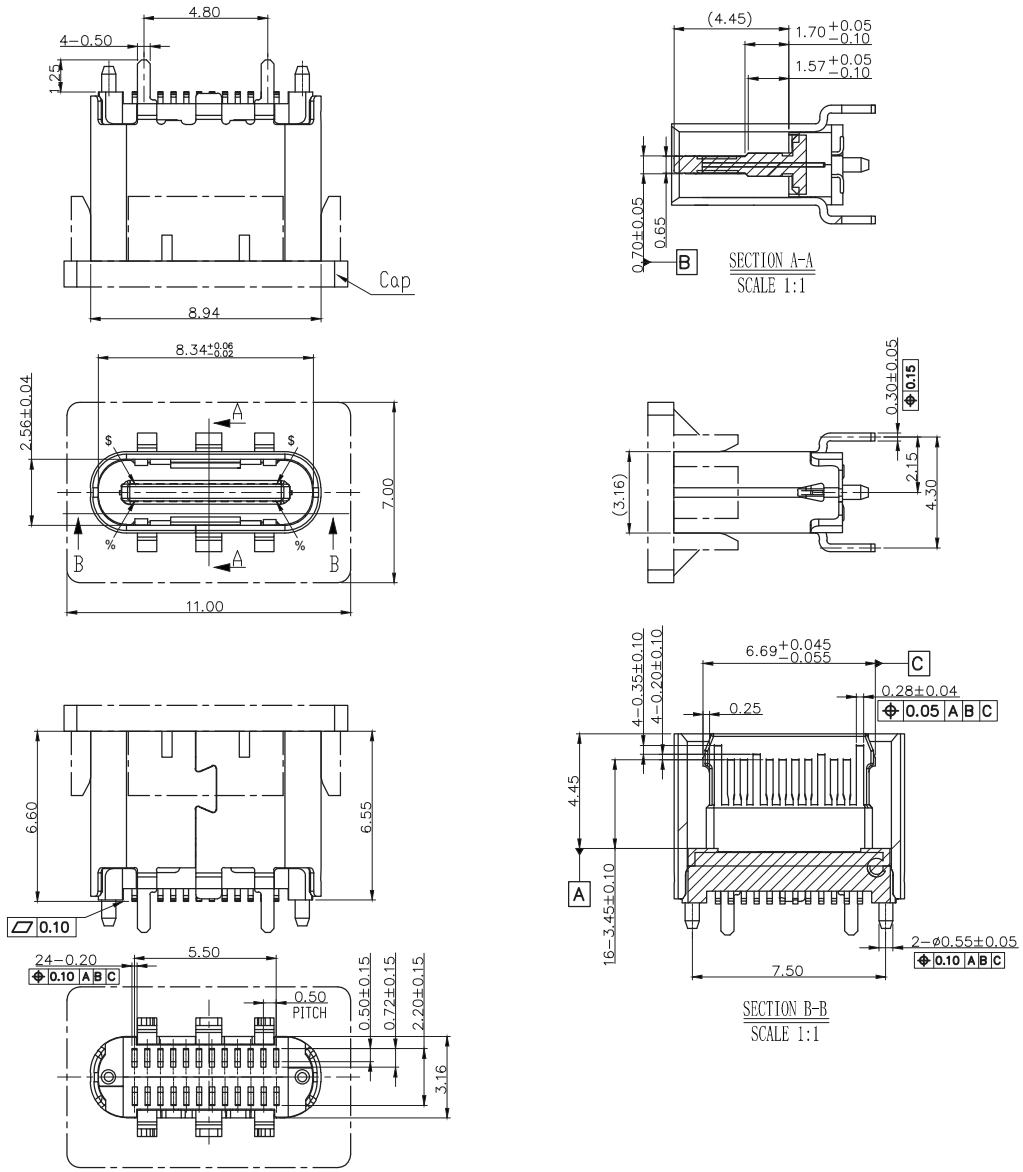

NOTES:

1.MATERIAL:
MOLDING: LCP UL94 V-0
CONTACT:COPPER ALLOY.
GOLD PLATING ALL OVER 50u" Min NICKEL
AND 100u"Min Tin ALL OVER 50u" Min NICKEL
ON SOLDER AREA
SHELL: SUS304-H,T=0.30±0.03mm
50u" NICKEL PLATING OVER ALL.

2.MECHANICAL:
INSERTION: 5~20N.
EXTRACTION: 8~20N AFTER TEST .
DURABILITY: 10000 CYCLES

3.ELECTRICAL:
CURRENT: 5A FOR VBUS;
1.25A FOR GND PIN.
0.25A FOR OTHER.
VOLTAGE: 20 V MAX
WITHSTANDING VOLTAGE: 100V AC R.M.S
CONTACT RESISTANCE: 40mΩ MAX.
INSULATION RESISTANCE: 100MΩ MIN.

4.ENVIRONMENTAL
TEMPERATURE RANGE -55°C ~ +85°C

RoHS Compliant

MORETHANALL
PCB CONNECTORS
Cable ASSEMBLIES
煜倫股份有限公司
www.morethanall.com

DRAWING BY CY		TOLERANCES ARE
CHECKED BY GENIUS		X. ± 0.40 .X ± 0.30 .XX ± 0.20 .XXX ± ANG ± 2°
UNIT / mm	SCALE 1 : 1	
DATE		
SIZE A4	PPOJECTION	

照片框

ORDER INFORMATION

USB-SV06MPMXCR-24C-LF

SERIES
FEMALE
180°SMT
HIGH 6.5mm
METAL FOOT
POST
METAL FOOT
NON SPRING
CAP
REEL
24 PIN C TYPE
LEADFREE

DESCRIPTION:

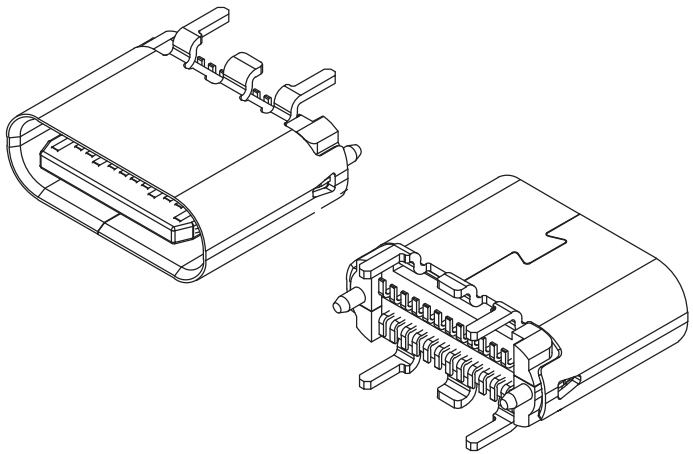

USB TYPE C 24PIN FULL-FEATURED
RECEPTACLE INTERFACE PIN ASSIGNMENTS

PIN	Signal Name	PIN	Signal Name
A1	GND	B12	GND
A2	SSTXp1	B11	SSRXp1
A3	SSTXn1	B10	SSRXn1
A4	VBUS	B9	VBUS
A5	CC1	B8	SBU2
A6	Dp1	B7	Dn2
A7	Dn1	B6	Dp2
A8	SBU1	B5	CC2
A9	VBUS	B4	VBUS
A10	SSRXn2	B3	SSTXn2
A11	SSRXp2	B2	SSTXp2
A12	GND	B1	GND

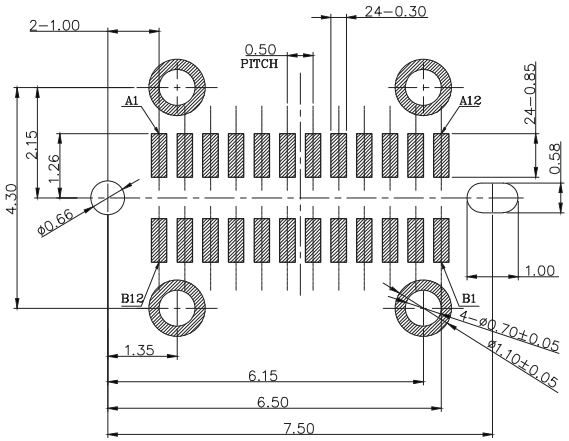

RECOMMENDED P.C.B. LAYOUT (T:1.00mm)
TOLERANCE UNSPECIFIED ±0.05mm
SCALE: 2:1

RoHS Compliant

MORETHANALL
PCB CONNECTORS
Cable ASSEMBLIES
煜倫股份有限公司
www.morethanall.com

DRAWING BY CY		TOLERANCES ARE
CHECKED BY GENIUS		X. ± 0.40 .X ± 0.30 .XX ± 0.20 .XXX ± ANG ± 2°
UNIT / mm	SCALE 1 : 1	
DATE		
SIZE A4	PPOJECTION	

照片框

ORDER INFORMATION

USB-SV06MPMXCR-24C-LF

- SERIES
- FEMALE
- 180°SMT
- HIGH 6.5mm
- METAL FOOT
- POST
- METAL FOOT
- NON SPRING
- CAP
- REEL
- 24 PIN C TYPE
- LEADFREE

DESCRIPTION:

出料方向
PULL OUT DIRECTEON

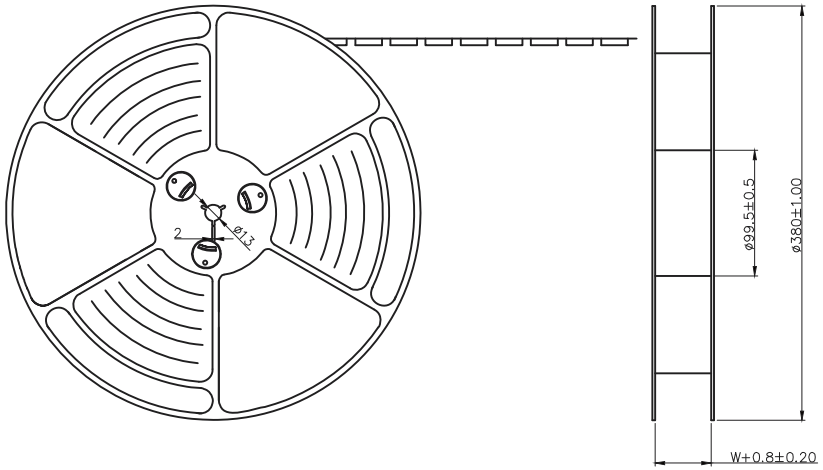

NOTES

1. 帶子引導長度
LEAD TAPE LENGTH
出料方向
PULL OUT DIRECTEON

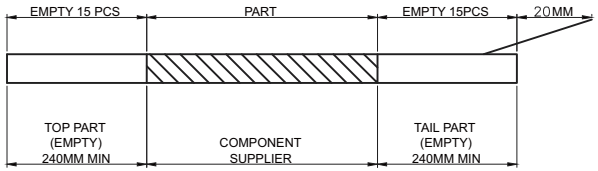

2. 出貨運輸過程中一定注意
THIS REQUIREMENT SHOULD BE APPLIED AT SHIPMENT
卷帶在運輸過程中不能散開
PEELING OFF SHOULD NOT BE ALLOWED DURING TRANSPORTATION

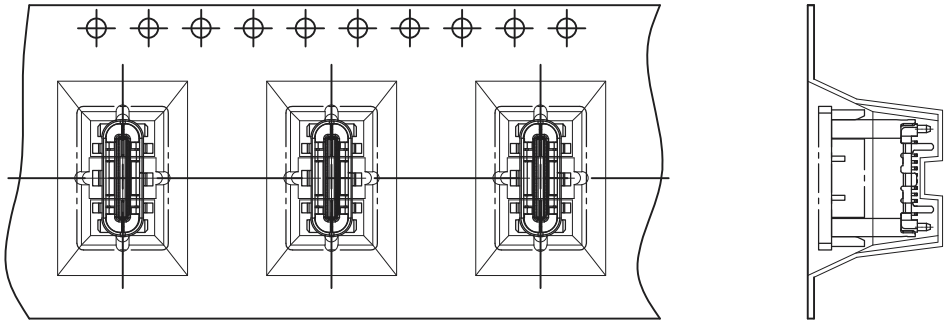

RoHS Compliant

MORETHANALL
PCB CONNECTORS
Cable ASSEMBLIES
煜倫股份有限公司
www.morethanall.com

DRAWING BY CY		TOLERANCES ARE
CHECKED BY GENIUS		X. ± 0.40 .X ± 0.30 .XX ± 0.20 .XXX ± ANG ± 2°
UNIT / mm	SCALE 1 : 1	
DATE		
SIZE A4	PPOJECTION	

照片框

ORDER INFORMATION

USB-SV06MPMXCR-24C-LF

SERIES
FEMALE
180°SMT
HIGH 6.5mm
METAL FOOT
POST
METAL FOOT
NON SPRING
CAP
REEL
24 PIN C TYPE
LEADFREE

DESCRIPTION:

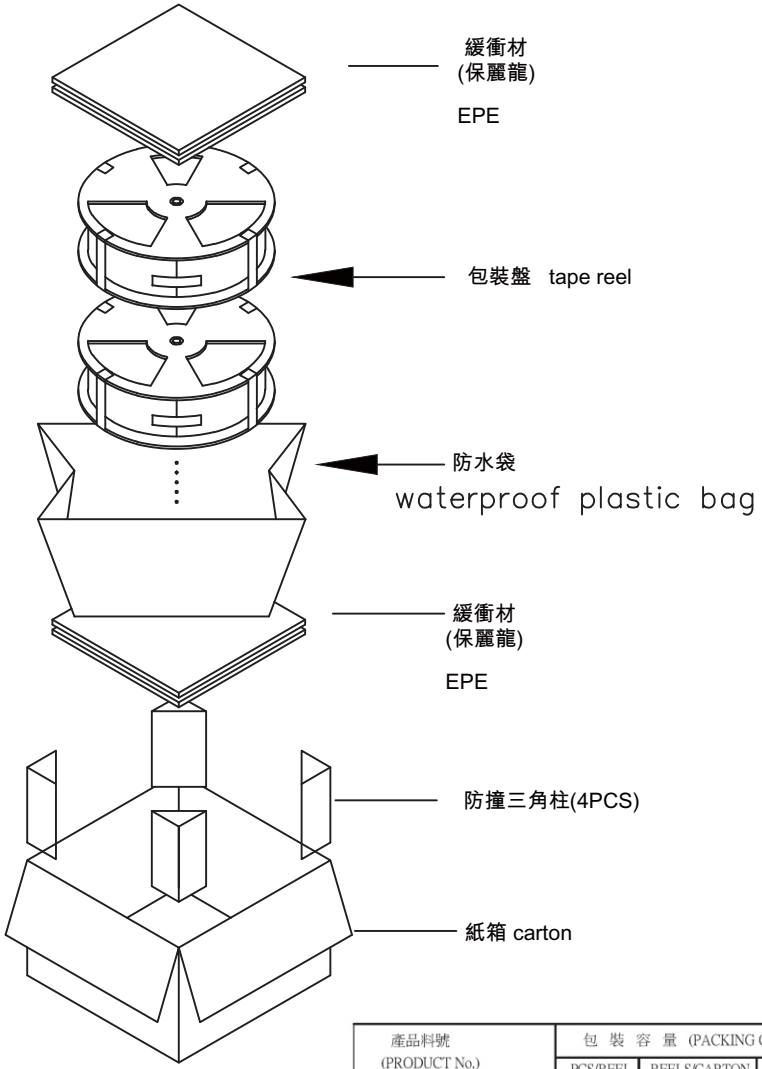

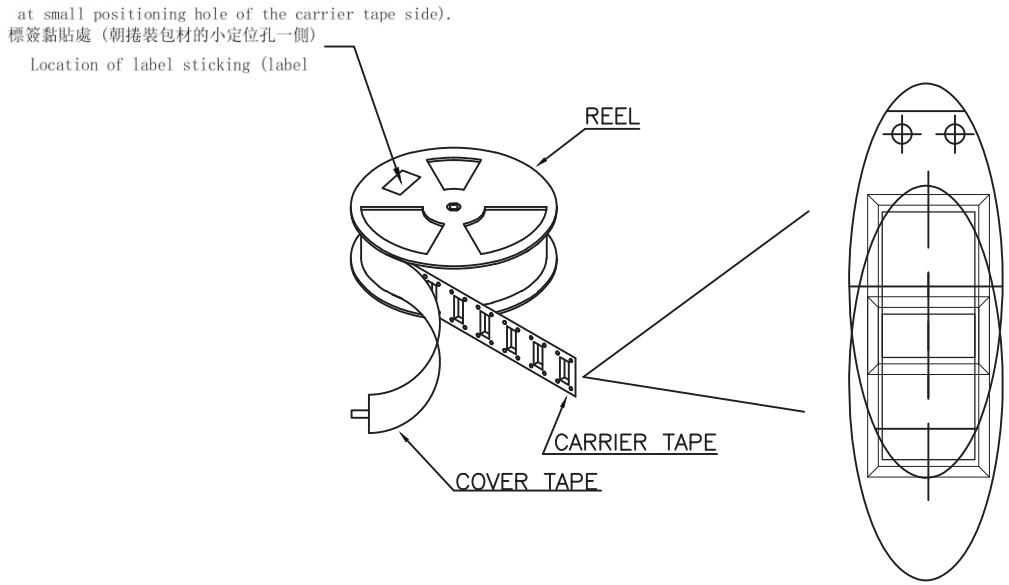

NOTE:

1. 每捲包裝數量及每箱裝箱數量如左下表格.
Packing q'ty of each reel & carton as below table shown.
2. 以上膠帶覆蓋下包裝帶經包裝機熱熔包裝
Use cover tape to cover and hot melt machine to seal up.
3. 每個紙箱放2個珍珠棉
Every carton use 2pcs EPE.
4. 將裝滿產品的卷盤放入紙箱并以膠帶封口
Put reels in the carton and use adhesive tape to seal up.

產品料號 (PRODUCT No.)	包 裝 容 量 (PACKING CAPACITY)			重 量 WEIGHT (Kg)		
	PCS/REEL	REELS/CARTON	PCS/CARTON	N.W./PCS	N.W./BOX	G.W./BOX
	800	8	6400			

RoHS Compliant

MORETHANALL PCB CONNECTORS Cable ASSEMBLIES
煜倫股份有限公司
www.morethanall.com

DRAWING BY CY		TOLERANCES ARE
CHECKED BY GENIUS		X. ± 0.40 .X ± 0.30 .XX ± 0.20 .XXX ± ANG ± 2°
UNIT / mm	SCALE 1 : 1	
DATE		
SIZE A4	PPOJECTION	

照片框

ORDER INFORMATION

USB-SV06MPMXCR-24C-LF

SERIES
FEMALE
180°SMT
HIGH 6.5mm
METAL FOOT
POST
METAL FOOT
NON SPRING
CAP
REEL
24 PIN C TYPE
LEADFREE

DESCRIPTION: