ITEM 項目	PARTS NAME 零件名稱	Q'TY 數量	MATERIAL 材質	FINISH/REMARK 處理/備註
1	HOUSING	1	SYNTHETIC RESIN	Black
2	CONTACT	24	COPPER ALLOY	Gold flash on contact area 100u" Min Matte-Tin on solder tails, base Ni: 50u"
3	SHELL	1	STAINLESS	Ni: 50u"
4	Shield	1	STAINLESS	-
5	Groung plate	1	STAINLESS	-
6	CAP	1	SYNTHETIC RESIN	Black

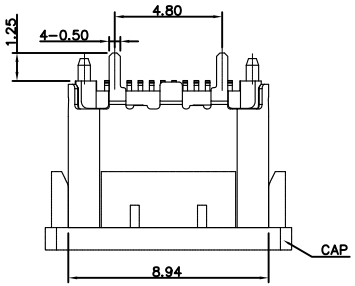

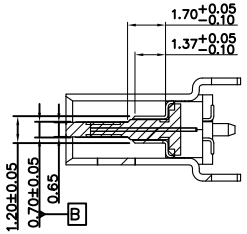

SECTION A-A
SCALE 1:1

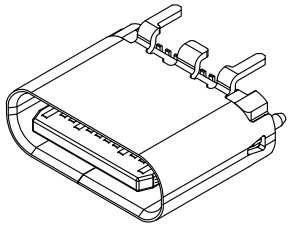

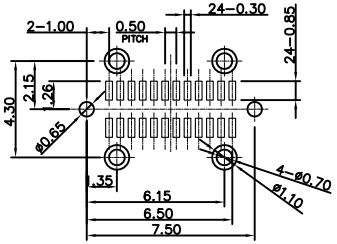

RECOMMENDED P.C.B. LAYOUT (T:1.00mm)
TOLERANCE UNSPECIFIED ±0.05mm

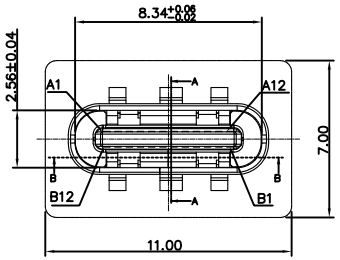

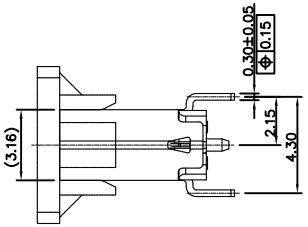

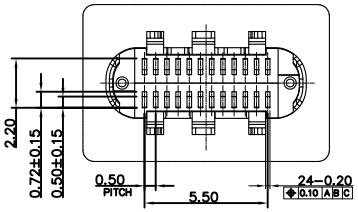

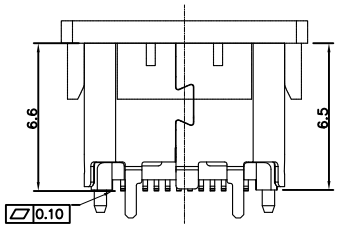

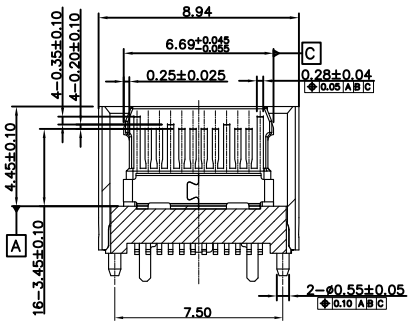

SECTION B-B
SCALE 1:1

USB TYPE-C FULL-FEATURED RECEPTACLE
INTERFACE PIN ASSIGNMENTS

PIN	Signal Name	Description	PIN	Signal Name	Description
A1	GND	Ground return	B12	GND	Ground return
A2	SSTXp1	Positive half of firs SuperSpeed TX differential pair	B11	SSRXp1	Positive half of firs SuperSpeed RX differential pair
A3	SSTXn1	Negative half of first SuperSpeed TX differential pair	B10	SSRXn1	Negative half of first SuperSpeed RX differential pair
A4	VBUS	Bus Power	B9	VBUS	Bus Power
A5	CC1	Configuration Channel	B8	SBU2	Sideband Use (SBU)
A6	Dp1	Positive half of the USB 2.0 differential pair-Position 1	B7	Dn2	Negative half of the USB 2.0 differential pair-Position 2
A7	Dn1	Negative half of the USB 2.0 differential pair-Position 1	B6	Dp2	Positive half of the USB 2.0 differential pair-Position 2
A8	SBU1	Sideband Use (SBU)	B5	CC2	Configuration Channel
A9	VBUS	Bus Power	B4	VBUS	Bus Power
A10	SSRXn2	Negative half of second SuperSpeed RX differential pair	B3	SSTXn2	Negative half of second SuperSpeed TX differential pair
A11	SSRXp2	Positive half of second SuperSpeed RX differential pair	B2	SSTXp2	Positive half of second SuperSpeed TX differential pair
A12	GND	Ground return	B1	GND	Ground return

SPECIFICATION
1.MATERIAL: See drawing
2.STANDARD DATA
2.1Rating current: 5.0A for VBUS (i.e.,pins A4,A9,B4,B9);
1.25A for Vconn and GND (i.e.,pins B5,A1,A12,B1,B12);
0.25A for all the other contacts.
3.ELECTRICAL
3.1.Insulator resistance: 100M ohms Min.
3.2.Withstanding voltage: 100 VAC / minute
3.3.Contact resistance: 40mohms Max.
4.MECHANICAL
4.1Mating force: 5~20N
4.2Unmating force : Initial 8~20N
After test 6~20N
4.3Durability: 10000 cycles Min.

RoHS Compliant

MORETHANALL
PCB CONNECTORS
Cable ASSEMBLIES
煜倫股份有限公司
www.morethanall.com

DRAWING BY CY	
CHECKED BY GENIUS	
UNIT / mm	SCALE 1 : 1
DATE	
SIZE A4	PPOJECTION

TOLERANCES ARE
X. ± 0.50
.X ± 0.30
.XX ± 0.20
.XXX ±
ANG ± 5°

照片框

ORDER INFORMATION

USB-SV0612MPMCR-24C-LF

SERIES
FEMALE
180°SMT
HIGH 6.5mm
METAL FOOT 1.25mm
POST
METAL FOOT
CAP
REEL
24 PIN C TYPE
LEADFREE

DESCRIPTION: USB 3.1 TYPE C 直立式母座

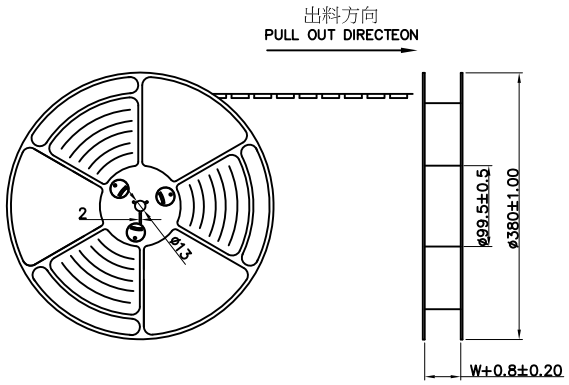

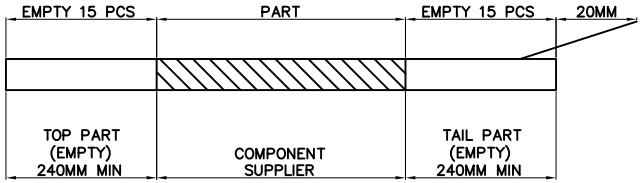

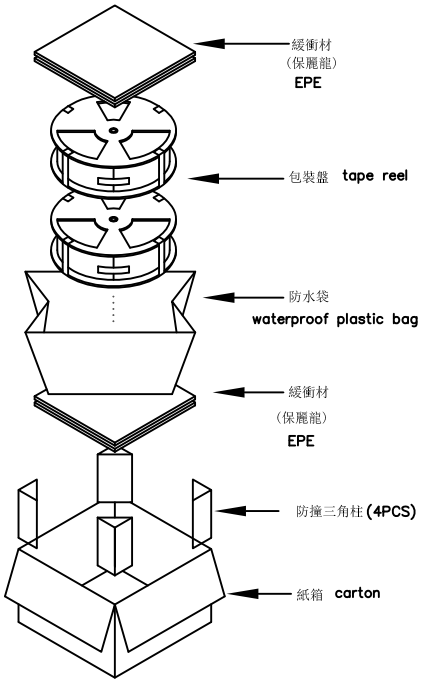

at small positioning hole of the carrier tape side).
標籤黏貼處（帶捲裝包材的小定位孔一側）
Location of label sticking (label

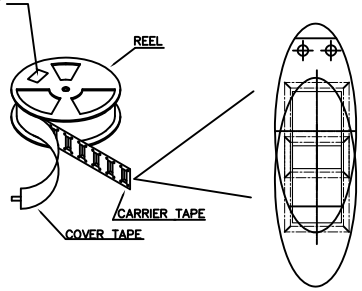

NOTE:

1. 每捲包裝數量及每箱裝箱數量如左下表格.
   Packing q'ty of each reel & carton as below table shown.
2. 以上膠帶覆蓋下包裝帶經包裝機熱熔包裝
   Use cover tape to cover and hot melt machine to seal up.
3. 每個紙箱放2個珍珠棉
   Every carton use 2pcs EPE.
4. 將裝滿產品的卷盤放入紙箱并以膠帶封口
   Put reels in the carton and use adhesive tape to seal up.

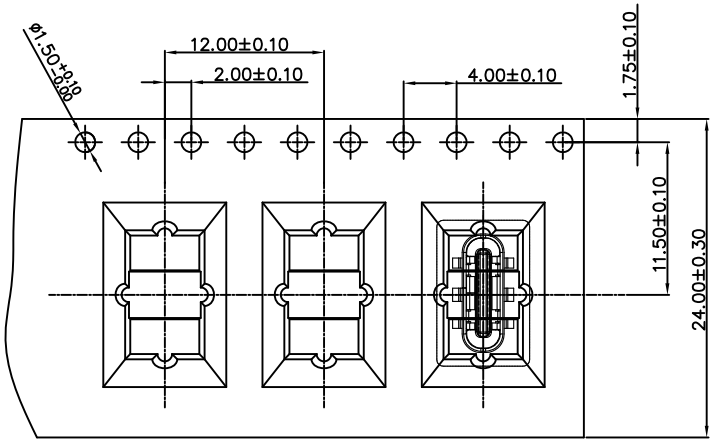

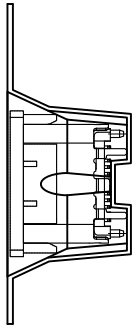

包 裝 容 量 (PACKING CAPACITY)			重 量 WEIGHT (Kg)		
PCS/REEL	REELS/CARTON	PCS/CARTON	N.W./PCS	N.W./BOX	G.W./BOX
800	8	6400			

RoHS Compliant

MORETHANALL PCB CONNECTORS Cable ASSEMBLIES
煜倫股份有限公司
www.morethanall.com

DRAWING BY CY		TOLERANCES ARE
CHECKED BY GENIUS		X. ± 0.30 .X ± 0.30 .XX ± 0.20 .XXX ± 0.10 ANG ± 1°
UNIT / mm	SCALE 1 : 1	
DATE		
SIZE A4	PPOJECTION	

照片框

ORDER INFORMATION

USB-SV0612MPMCR-24C-LF

- SERIES
- FEMALE
- 180°SMT
- HIGH 6.5mm
- METAL FOOT 1.25mm
- POST
- METAL FOOT
- CAP
- REEL
- 24 PIN C TYPE
- LEADFREE

DESCRIPTION: Packing specification