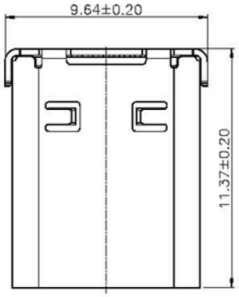

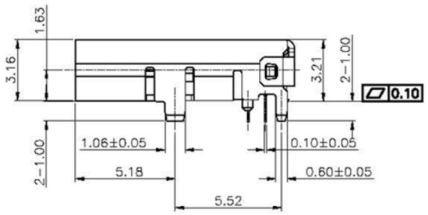

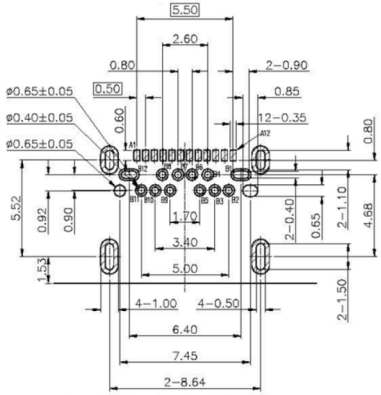

RECOMMENDED PCB LAYOUT(TOP VIEW)
(THICKNESS=1.0±0.10mm)
(TOLERANCE=±0.05mm)

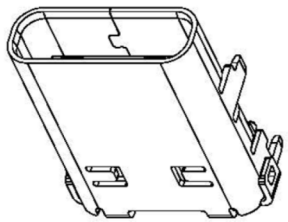

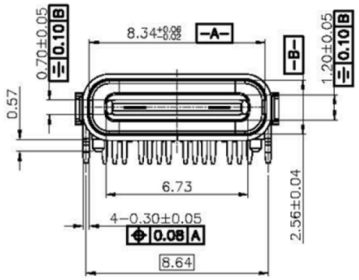

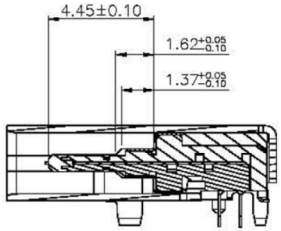

SECTION A-A

NOTES:
1. MATERIAL:
   1.1 SHELL: SUS301R-H T=0.30mm
   1.2 SIGNAL: SUS301R-H T=0.10mm
   1.3 RFI PAD: SUS301R-H T=0.08mm
   1.3 HOUSING: PA46+20%G.F. UL94UL-0 BLACK
   1.4 TERMINAL: NKE012R-H T=0.10mm
2. PLATING:
   2.1 TERMINAL: SEE P/N
   2.2 SHELL: NICKEL PLATED 60u"MIN.
3.ELECTRICAL CHARACTERISTICS:
   3.1 CURRENT RATING: 3.0A
   3.2 VOLTAGE RAGTING: 5.0V
   3.3 LLCR: VBUS & GND PINS: 20mΩ/PIN MAX.
       OTHER PINS:40mΩ/PIN MAX.
       LLCR MAX.CHANGE OF ALL PINS:10mΩ
   3.4 INSULATION RESISTANCE: 100MΩ MIN.
4.MECHANICAL CHARACTERISTICS:
   4.1 MATING FORCE: 0.5~2.0kg.
   4.2 UNMATING FORCE: 0.8~2.0kg.(INTITIAL) 0.5~2.0kg.(AFTER LIFE TEST)
5.LIFE TEST:10,000 CYCLES MIN

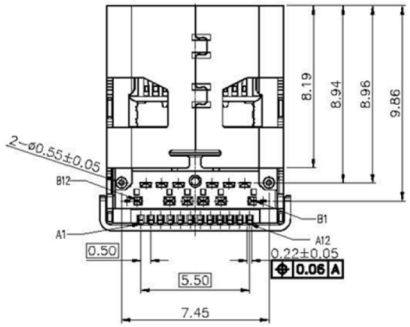

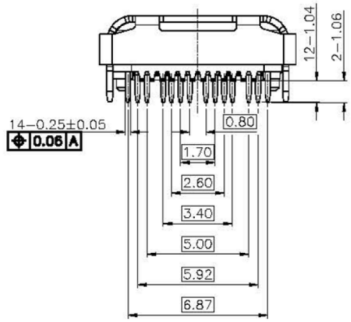

RoHS Compliant

MORETHANALL
PCB CONNECTORS
Cable ASSEMBLIES
煜倫股份有限公司
www.morethanall.com

DRAWING BY CY		TOLERANCES ARE
CHECKED BY GENIUS		X. ± 0.25 .X ± 0.15 .XX ± 0.05 .XXX ± ANG ±
UNIT / mm	SCALE 1 : 1	
DATE		
SIZE A4	PPOJECTION	

照片框

ORDER INFORMATION

USB-SRWMP8674MX-24C-LF

- SERIES
- FEMALE
- DIP 90°
- 90°SMT
- METAL FOOT 8.64+POST 7.45mm
- METAL FOOT
- NON SPRING
- 24 PIN C TYPE
- LEADFREE

DESCRIPTION: