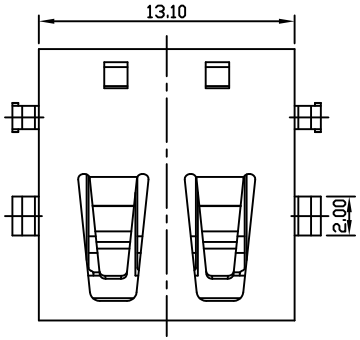

NO.	NAME	MATERIAL	FINISH
1	HOUSING	Nylon / Lcp	
2	CONTACT	Copper Alloy	Gold-Tin Plated
3	SHELL	Alloy	Ni Plated

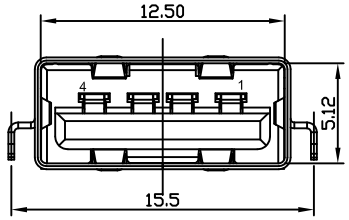

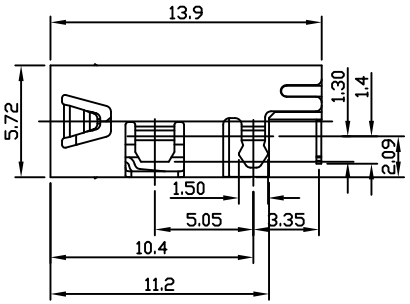

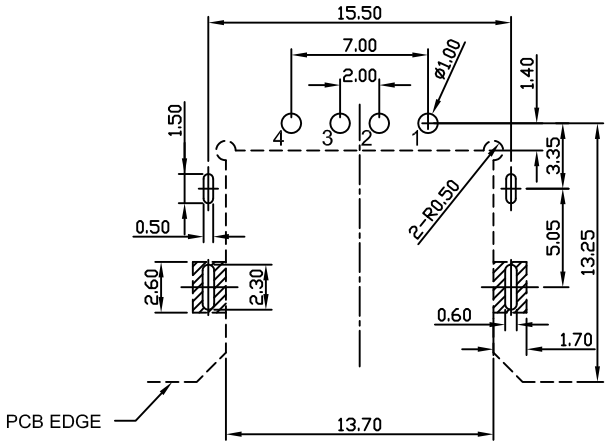

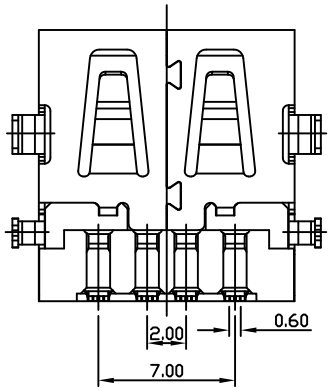

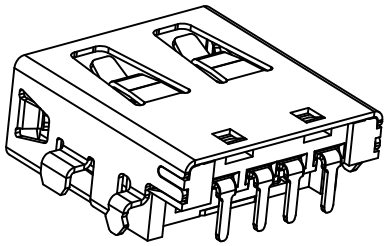

RECOMMENDED PCB LAYOUT
TOP VIEW

1 , RECOMMENDED PCB THICKNESS:1.20± 0.05mm
2 , DIMENSION TOLERANCE : .XX± 0.05

RoHS Compliant

MORETHANALL PCB CONNECTORS Cable ASSEMBLIES
煜倫股份有限公司
www.morethanall.com

DRAWING BY CY		TOLERANCES ARE
CHECKED BY GENIUS		X. ± .X ± 0.25 .XX ± 0.15 .XXX ± 0.075 ANG ±
UNIT / mm	SCALE 1 : 1	
DATE		
SIZE A4	PPOJECTION	

照片框

ORDER INFORMATION

USB-SRRVF27M2xx-4A-LF

- SERIES
- FEMALE
- 90°SMT
- REVERSED
- OFFSET
- 2.76mm
- METAL FOOT
- WH:WHITE
- BK:BLACK
- 4 PIN A TYPE
- LEADFREE

DESCRIPTION: USB. TYPE A REVERSE FLAT 90° DIP