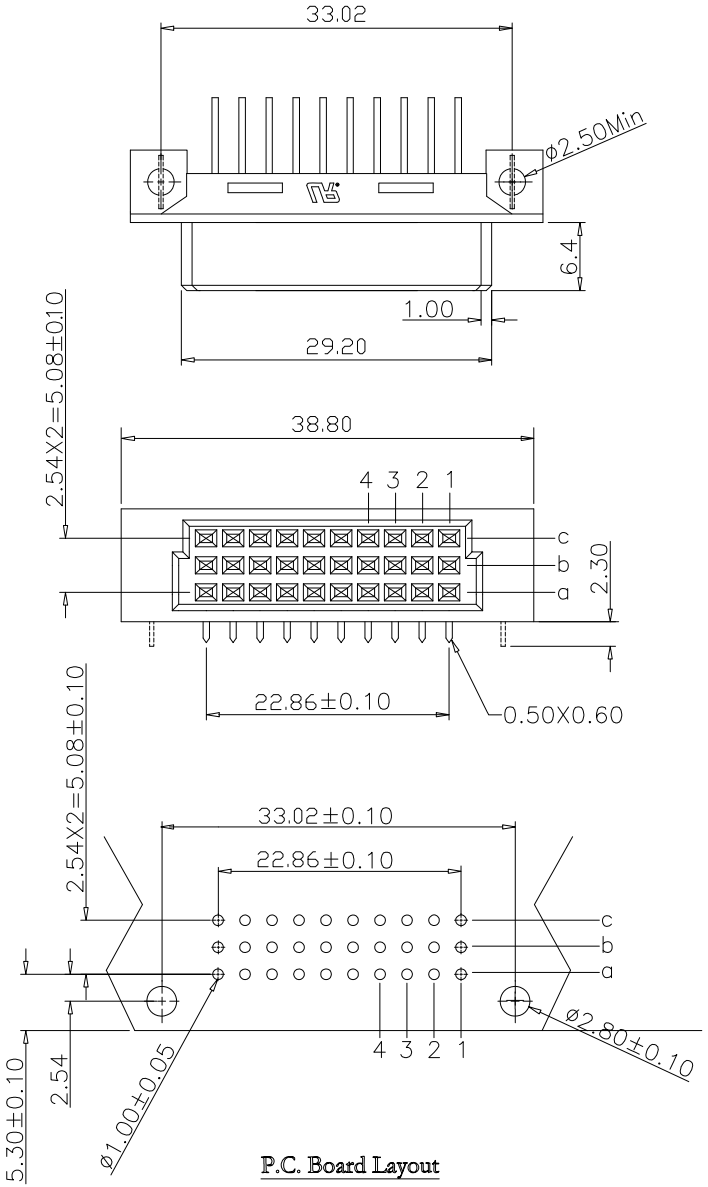

P.C. Board Layout

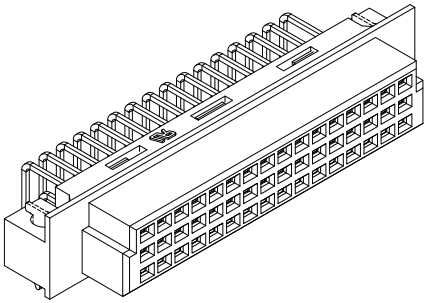

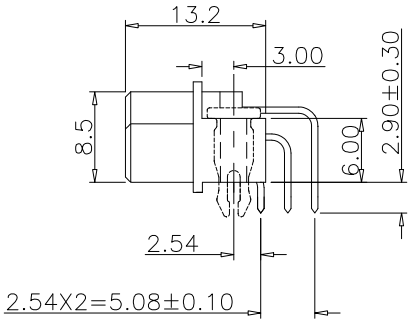

Material:

Housing: 30% Glass Filled PBT UL94V-0.
Contacts: Phosphor Bronze.
Lock: Phosphor Bronze.

Electrical Characteristics:

Current Rating: 2 AMP.
Dielectric Withstanding Voltage: AC 1000V For 1 minute .
Insulator Resistance: 1000MΩ min. at DC 500V.
Contact Resistance: 30mΩ max. at DC 100mA.
Operating Temperature: -55°C~+105°C .

*RoHS Compliant

RoHS Compliant

MORETHANALL PCB CONNECTORS Cable ASSEMBLIES
煜倫股份有限公司
www.morethanall.com

DRAWING BY CY		TOLERANCES ARE
CHECKED BY GENIUS		X. ±
UNIT / mm	SCALE 1 : 1	.X ±
		.XX ±
DATE		.XXX ±
		ANG ±
SIZE A4	PPOJECTION	

照片框

ORDER INFORMATION

UC-SRZ-3X10-LF

SERIES
FEMALE
DIP 90°
CLIP
30 WAY
LEADFREE

DESCRIPTION: