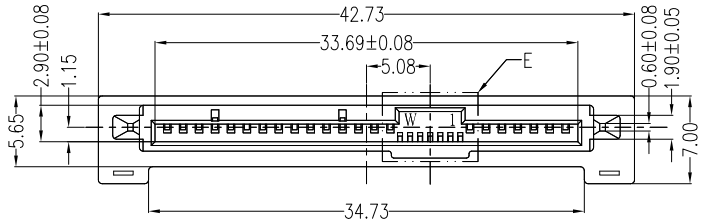

Signal Segment			
Pin NO.	Type	Name	Type
S1	Signal Ground	S8	Signal Ground
S2	TP+	S9	TS+
S3	TP−	S10	TS−
S4	Signal Ground	S11	Signal Ground
S5	RP−	S12	RS−
S6	RP+	S13	RS+
S7	Signal Ground	S14	Signal Ground

Power Segment			
Pin NO.	Type	Name	Type
P1	V33	P9	V5
P2	V33	P10	Ground
P3	V33	P11	Ready Led
P4	Ground	P12	Ground
P5	Ground	P13	V12
P6	Ground	P14	V12
P7	V5	P15	V12
P8	V5		

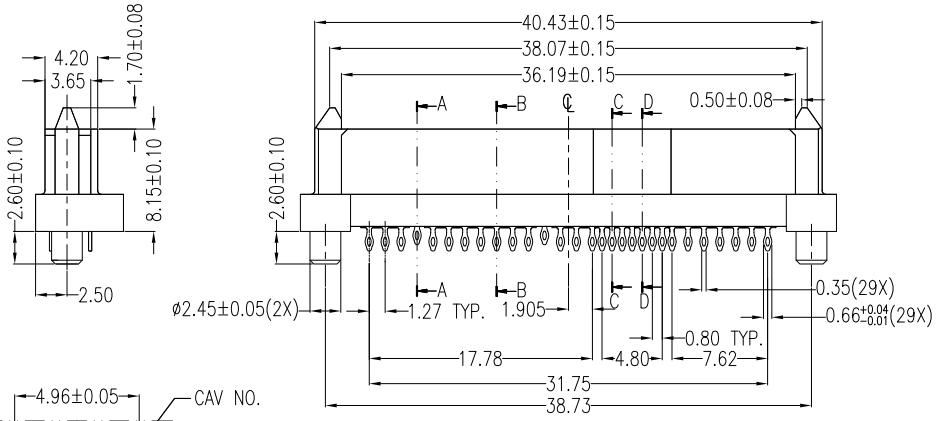

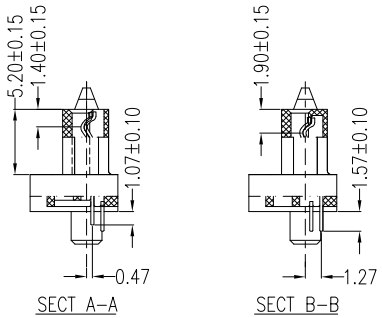

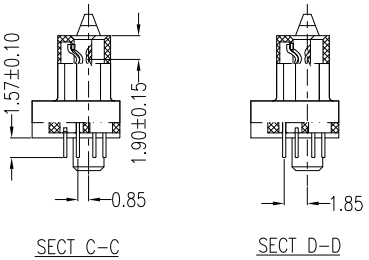

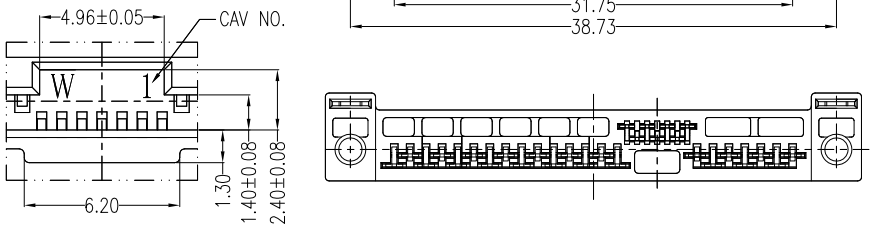

VIEW E
SCALE 2:1

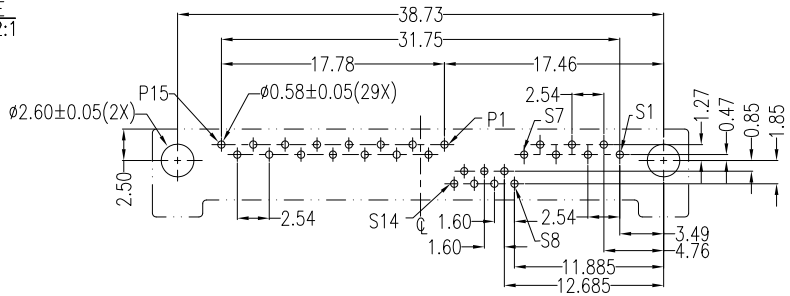

PCB LAYOUT(T=1.60mm)
COMPONENT SIDE

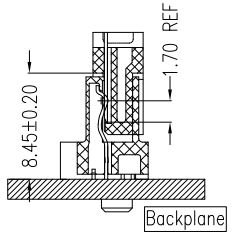

Backplane wipe requirements

NOTES:

*Material

Housing: Nylon9T+30%G.F, UL 94V−0 rated, Color: Black
Contact: Phosphor Bronze;
Plating:Au plating on contact area,Sn(100u" min.) plating on solder tail,Ni(40u" min.) underplating overall

*Mechanical

Insertion Force: 25N max.
Withdrawal Force: 5N min.
Durability: 50 cycles

*Electrical Specification

Current Rating: 1.5 Ampere per contact;
Contact Resistance: 30 mΩ max.
Insulation Resistance: 1000 MΩ min.
Dielectric Withstanding Voltage: 500 VAC.

*Environmental

Operating Temperature: 0°C to +55°C

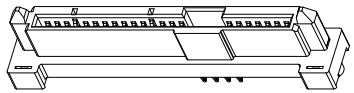

RoHS Compliant

MORETHANALL PCB CONNECTORS Cable ASSEMBLIES
煜倫股份有限公司
www.morethanall.com

DRAWING BY CY		TOLERANCES ARE
CHECKED BY GENIUS		X. ±
UNIT / mm	SCALE 1 : 1	.X ± 0.38
		.XX ± 0.25
DATE		.XXX ± 0.20
		ANG ± 3°
SIZE A4	PPOJECTION	

照片框

ORDER INFORMATION

SAS-SPP-29-LF

- SERIES
- FEMALE
- PRESS FIT
- POST
- 29 WAY
- LEADFREE

DESCRIPTION: SAS 29P Vertical Double Row Female (Press Fit 1.57)