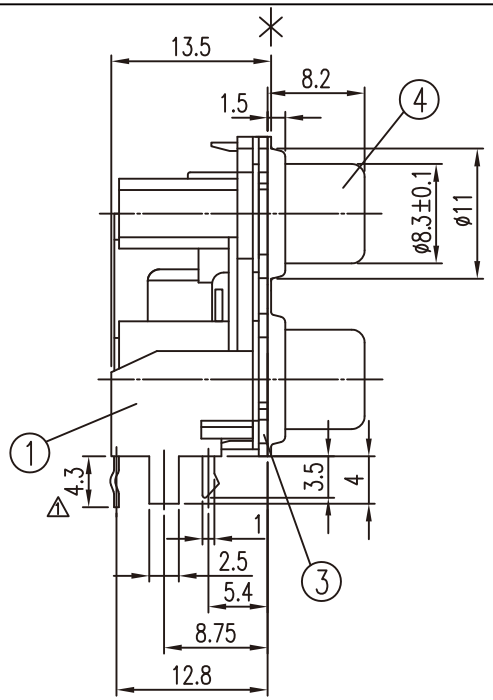

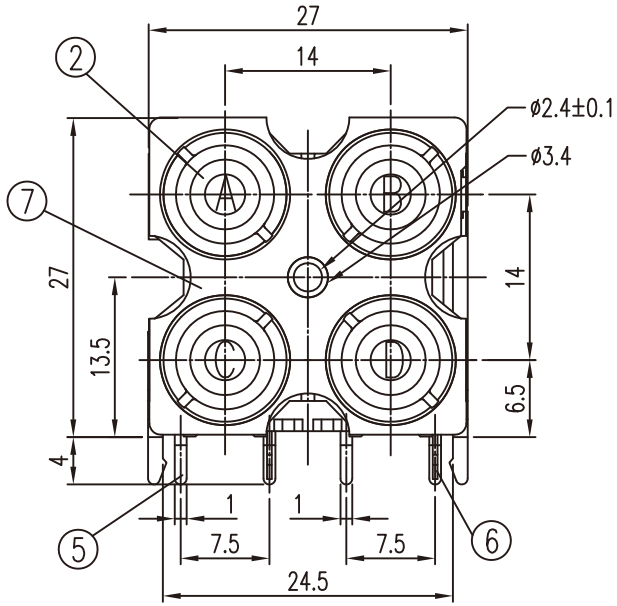

RCAB2-JR54E1OWYR14-03		
WASHER	A	B
	C	D
COLOR	ORANGE	WHITE
	YELLOW	RED

SCHEMATIC DIAGRAM

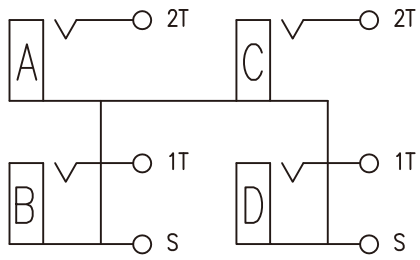

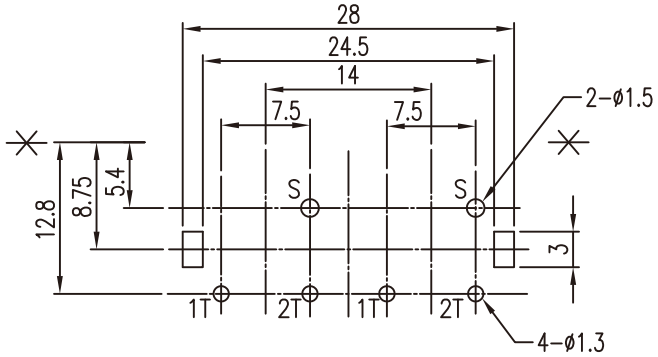

T:1.6 Dimensions of PC board holes

Tolerance : ±0.1(Printed-bottom view)

UNLESS OTHERWISE SPECIFIED, TOLERANCE ON DECIMAL: ±0.3

LTR	PART NAME	QTY	MATERIAL	REMARK
7	SEALED PLATE	1	C2680 t=0.4	MB:Cu Cu/Sn PLATED
6	TERMINAL	2	C2680 t=0.4	MB:Cu Cu/Sn PLATED
5	TERMINAL	2	C2680 t=0.4	MB:Cu Cu/Sn PLATED
4	OUTER CONTACT	2	C2680 t=0.4	MB:Cu Cu/Sn PLATED
3	COVER	2	ABS	UL-94HB(BLACK)
2	WASHER	4	ABS	UL-94HB
1	HOUSING	1	ABS	UL-94HB(BLACK)

RoHS Compliant

MORETHANALL PCB CONNECTORS Cable ASSEMBLIES

煜倫股份有限公司

www.morethanall.com

DRAWING BY CY		TOLERANCES ARE
CHECKED BY GENIUS		X. ±
UNIT / mm	SCALE 1 : 1	.X ±
		.XX ±
DATE		.XXX ±
		ANG ±
SIZE A4	PPOJECTION	

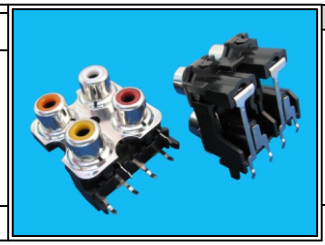

ORDER INFORMATION

RCAB2-JR54E1OWYR14-03-LF

- SERIES
- JACK
- DIP 90°
- 5.4mm
- EAR
- AB:ORANGE / WHITE
- CD:YELLOW / RED
- 14mm
- 03 WAY
- LEADFREE

DESCRIPTION: