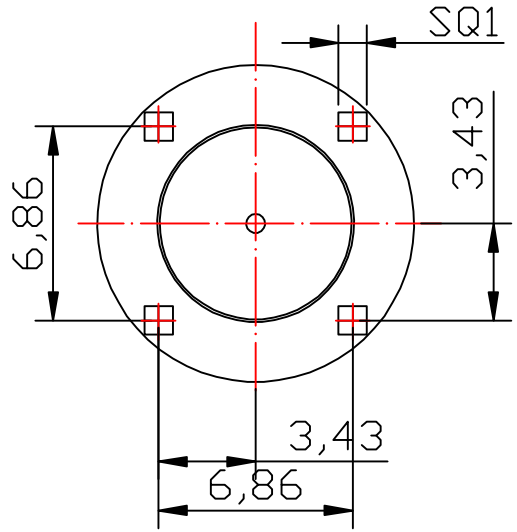

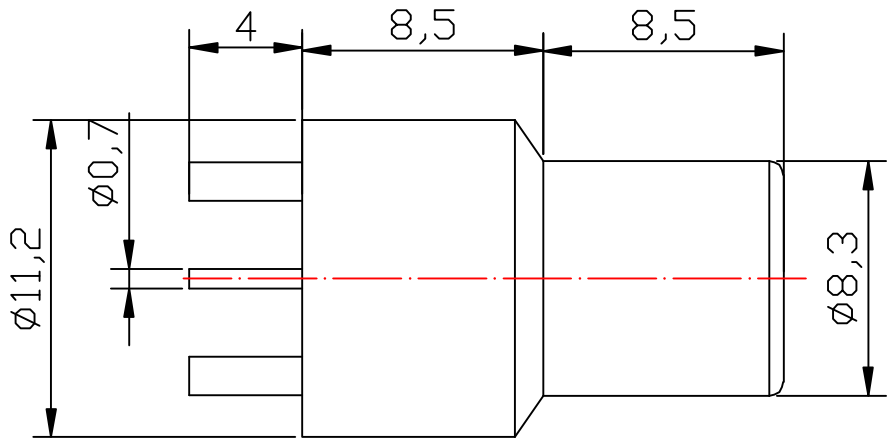

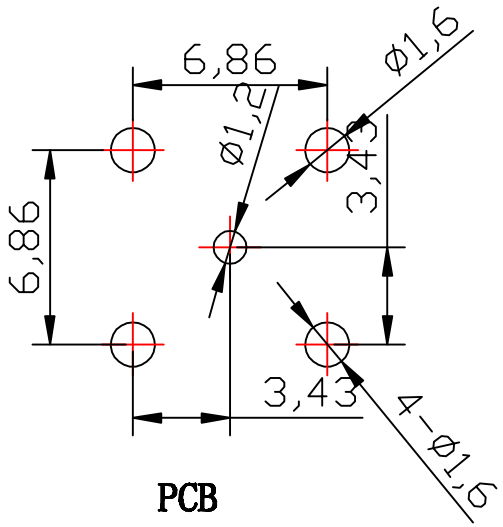

PCB

3	PIN	BRASS	NICKEL	1
2	INSULATOR	PLASTIC	WHITE	1
1	BODY	BRASS	NICKEL	1
NO	DESCRIPTION	MATERIAL	FINISH	QTY

RoHS Compliant

MORETHANALL PCB CONNECTORS Cable ASSEMBLIES

煜倫股份有限公司

www.morethanall.com

DRAWING BY CY

CHECKED BY GENIUS

UNIT / mm | SCALE 1 : 1

DATE

SIZE A4 PPOJECTION

TOLERANCES ARE

0.5-5	=±0.2
5-30	=±0.4
30-120	=±0.6
120-315	=±1
315-1000	=±1.6
1000-2000	=±2.4

照片框

ORDER INFORMATION

RCA-JD08WH-02-LF

SERIES | JACK | DIP 180° | HIGH 8.5mm | WHITE | 02 WAY | LEADFREE

DESCRIPTION: RCA FEMALE PCB MOUNT