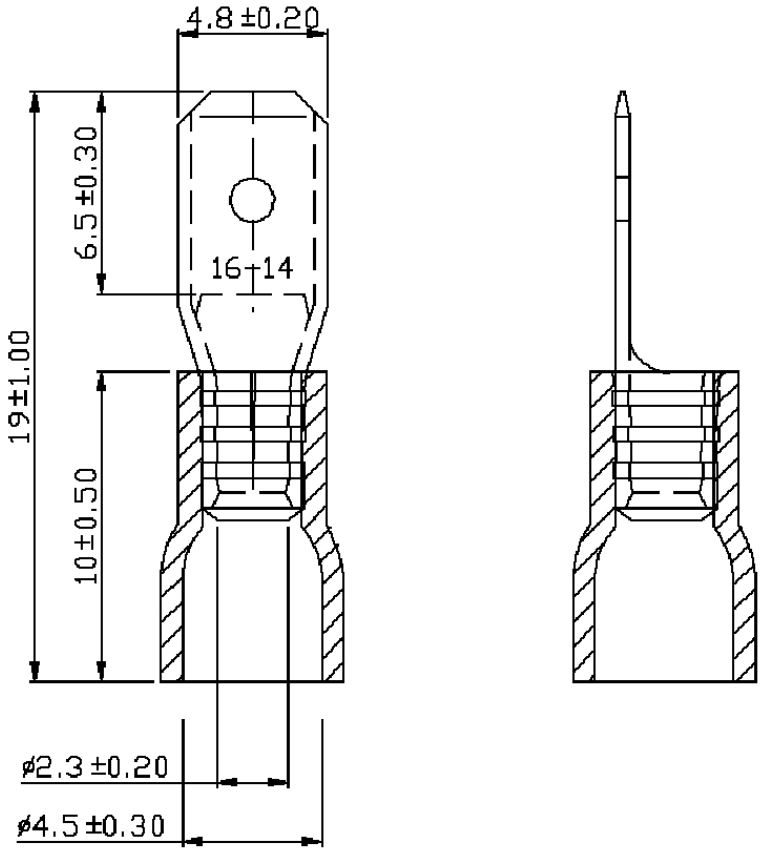

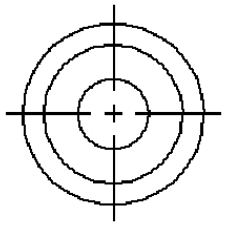

NOTE:

1. MAXIMUM ELECTRIC CURRENT :

A.W.G.	16	14		
AMP.	10	15		

2. MAXIMUM ELECTRICAL RATING : 75°C 300 VOLTS MAX.
3. INSULATION MATERIAL : VINYL
4. INSULATION COLOR : BLUE
5. TERMINAL MATERIAL : BRASS
6. WIRE RANGE : 16-14 A.W.G.(1.5-2.5mm²)
7. TERMINALS SURFACE TREATMENT : TIN PLATED
8. TERMINALS THICKNESS : 0.5 mm
9. NEMA TAB : 0.020 * 0.187 (0.5 * 4.75)

RoHS Compliant

MORETHANALL
PCB CONNECTORS
Cable ASSEMBLIES
煜倫股份有限公司
www.morethanall.com

DRAWING BY CY		TOLERANCES ARE
CHECKED BY GENIUS		X. ±
UNIT / mm	SCALE 1 : 1	.X ±
		.XX ±
DATE		.XXX ±
		ANG ±
SIZE A4	PPOJECTION	

照片框

ORDER INFORMATION

Q187-MT5V-14-LF

SERIES
MALE
TIN
THICKNESS 0.5mm
VINYL
14~16 AWG
LEADFREE

DESCRIPTION: