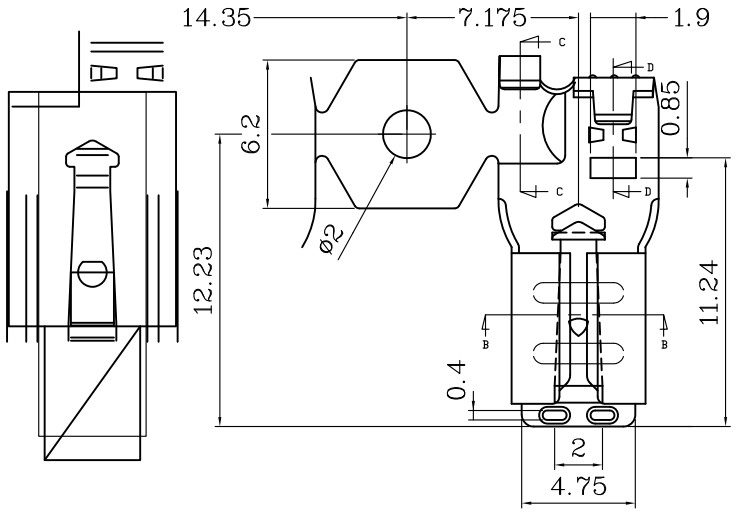

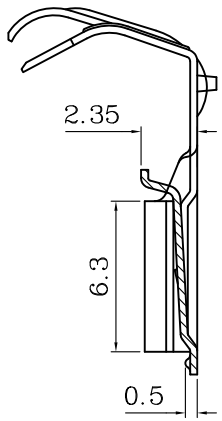

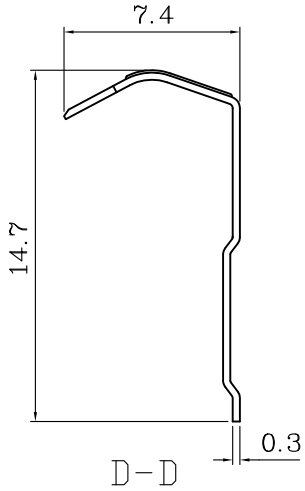

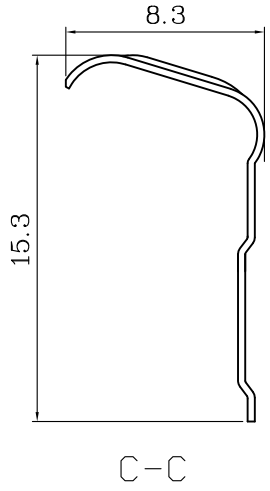

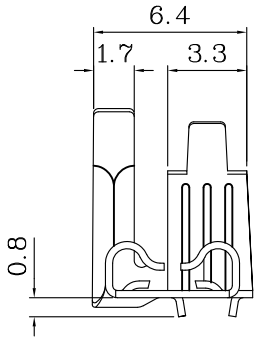

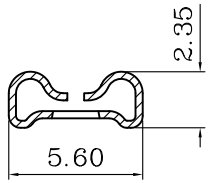

NOTE:
1. 表面處理:
預鍍錫 40u" 以上

1.SURFACE TREATMENT:
PRE-TIN
THICKNESS MORE THAN 40u"

材 質 MATERIAL	JIS2680	一般公差 GENERAL TOLERANCE	X :±0.5 X.X :±0.3 X.XX:±0.1 X.XXX :±0.05 ANGLES ±3°	比例 SCALE	3:1
料 厚 THICKNESS	0.3	包裝數量 PACKING Q'TY	4000 PCS/R	適用電線 WIRE RANGE	22~16
間 距 PITCH	14.35	對 手 件 MATING PART	TAB=0.8		

RoHS Compliant

MORETHANALL
PCB CONNECTORS
Cable ASSEMBLIES
煜倫股份有限公司
www.morethanall.com

DRAWING BY CY		TOLERANCES ARE
CHECKED BY GENIUS		X. ± .X ± .XX ± .XXX ± ANG ±
UNIT / mm	SCALE 1 : 1	
DATE		
SIZE A4	PPOJECTION	

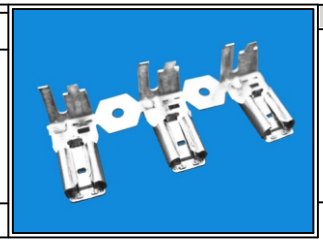

ORDER INFORMATION

Q187-GT8LS-16-LF
SERIES
FLAG
0.8t
TERMINAL
LOCKING
SPRING
16~22AWG
LEADFREE

DESCRIPTION: