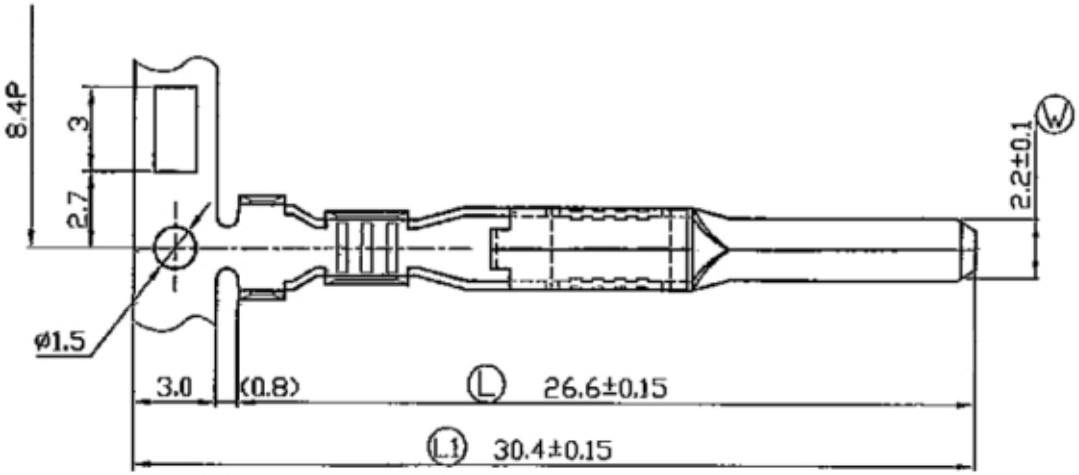

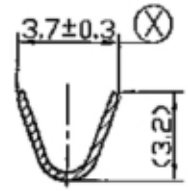

SEC.A-A

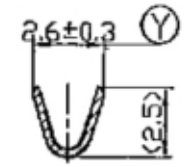

SEC.B-B

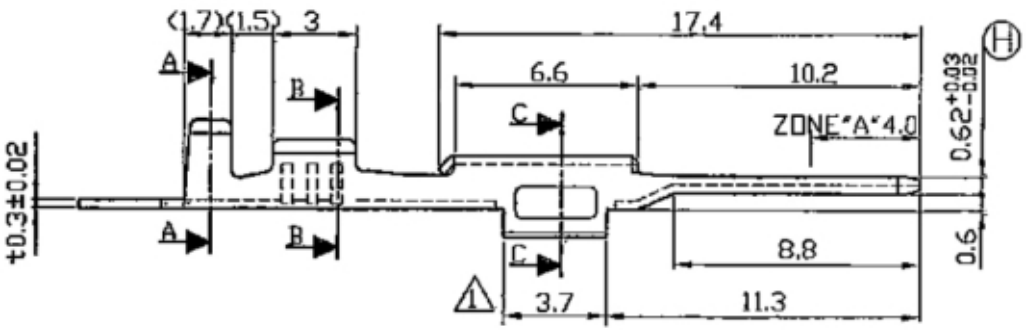

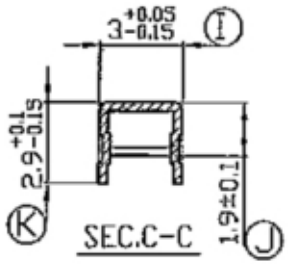

SEC.C-C

說明:
1.預鍍錫膜厚40u"以上。
2.擇鍍金Zone"A"測厚區5u"以上。
線徑： 0.3~0.5mm²

NOTE:
1.Pre-Tin Plated Thickness More Than 40u".
2.Selective Gold Plating 5u" Over Zone"A"

RoHS Compliant

MORETHANALL
PCB CONNECTORS
Cable ASSEMBLIES
煜倫股份有限公司
www.morethanall.com

DRAWING BY CY		TOLERANCES ARE
CHECKED BY GENIUS		X. ±
UNIT / mm	SCALE 1 : 1	.X ±
		.XX ±
DATE		.XXX ±
		ANG ±
SIZE A4	PPOJECTION	

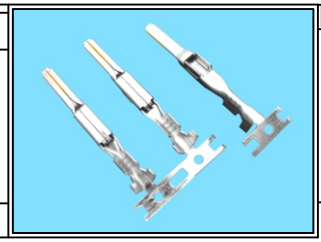

ORDER INFORMATION

Q090-MT-20-LF

SERIES | MALE TERMINAL | 20 AWG | LEADFREE

DESCRIPTION: