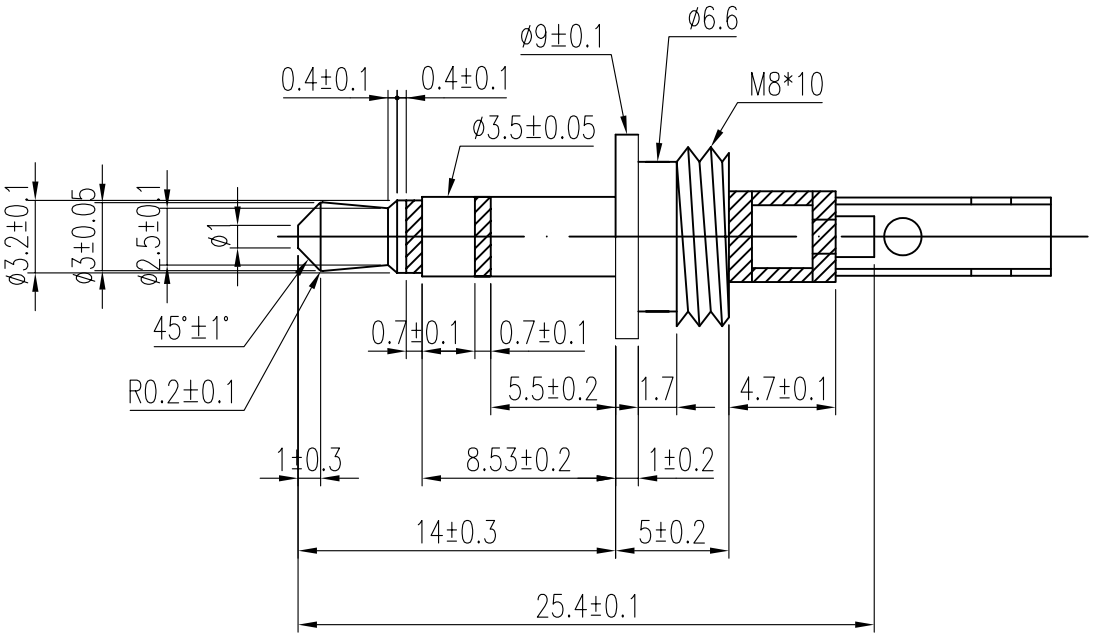

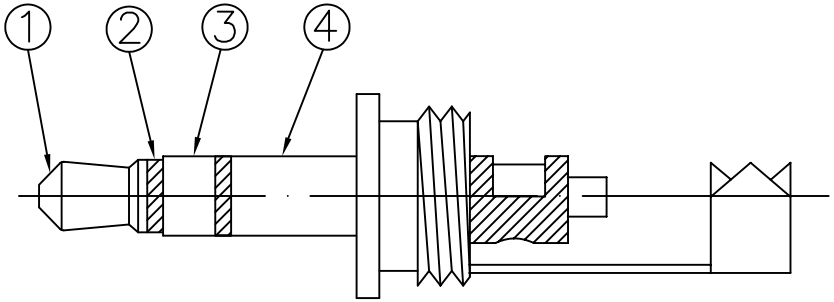

NO	CONTENT
4	BRASS NICKEL
3	BRASS NICKEL
2	A.B.S BLACK
1	BRASS NICKEL

RoHS Compliant

MORETHANALL PCB CONNECTORS Cable ASSEMBLIES

煜倫股份有限公司

www.morethanall.com

DRAWING BY CY	
CHECKED BY GENIUS	
UNIT / mm	SCALE 1 : 1
DATE	
SIZE A4	PPOJECTION

TOLERANCES ARE
X. ±
.X ±
.XX ±
.XXX ±
ANG ±

照片框

ORDER INFORMATION

PP-AXC-03-LF

SERIES
ASSEMBLY
NON COVER
03 WAY
LEADFREE

DESCRIPTION: ø3.5 STEREO PLUG