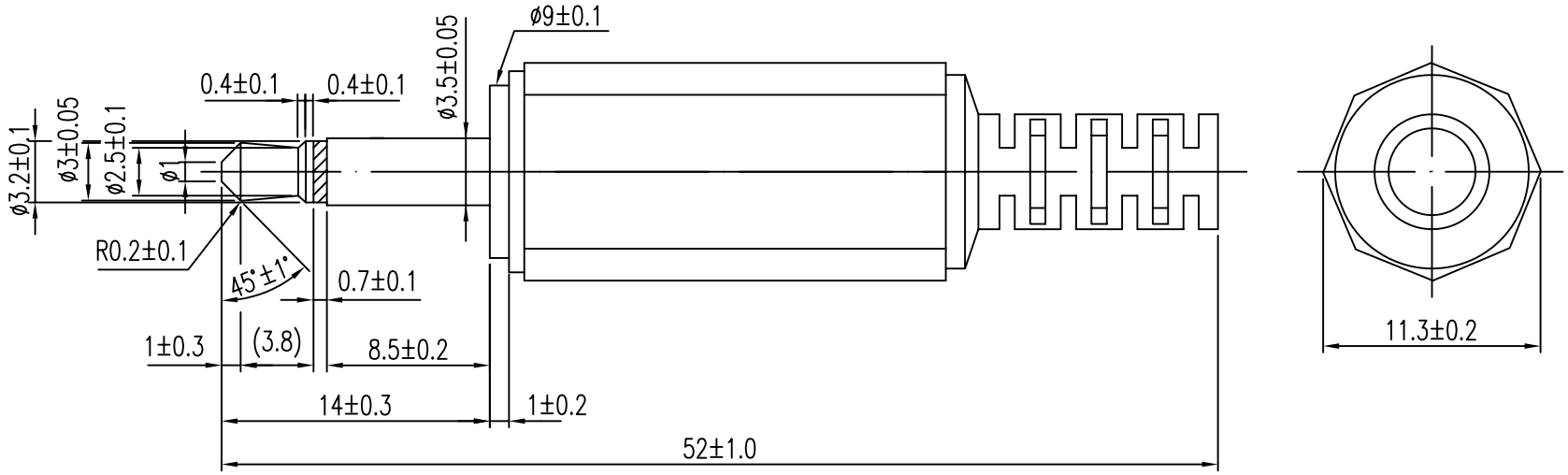

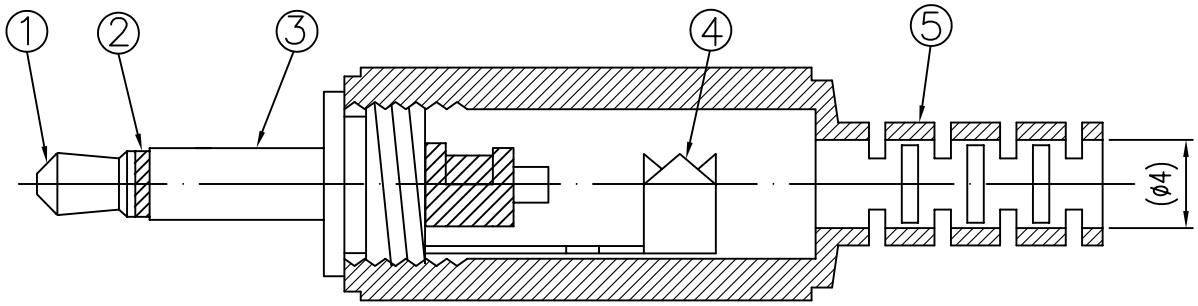

PART NO.	MATERIAL	PLATING
1.	BRASS	NICKEL
2.	ABS	BLACK
3.	BRASS	NICKEL
4.	BRASS	NICKEL
5.	PVC	BLACK

RoHS Compliant

MORETHANALL
PCB CONNECTORS
Cable ASSEMBLIES
煜倫股份有限公司
www.morethanall.com

DRAWING BY CY	
CHECKED BY GENIUS	
UNIT / mm	SCALE 1 : 1
DATE	
SIZE A4	PPOJECTION

TOLERANCES ARE
X. ±
.X ±
.XX ±
.XXX ±
ANG ±

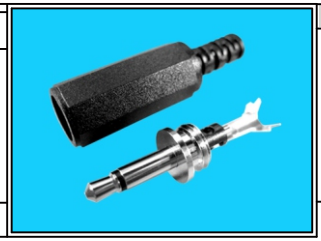

ORDER INFORMATION

PP-A-02-LF

SERIES
ASSEMBLY
02WAY
LEADFREE

DESCRIPTION: *3.5MP–ø9 Assembly type*