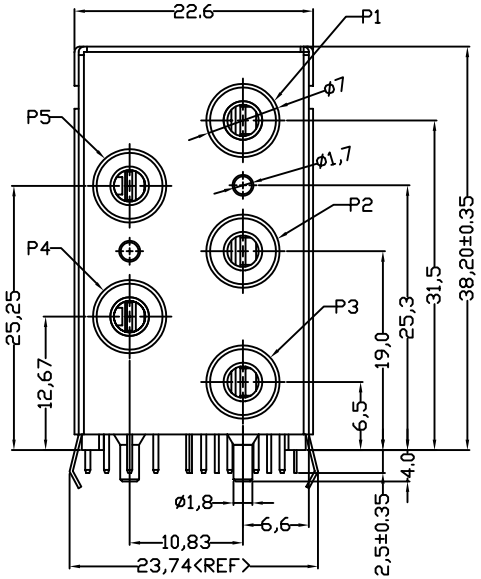


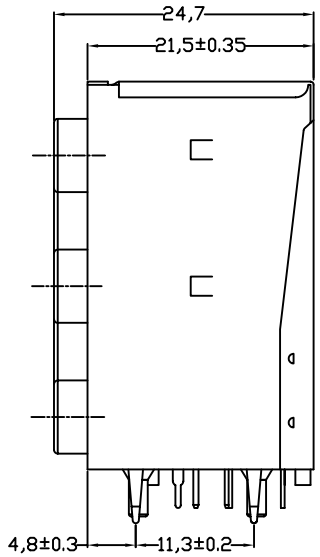


MATERIALS
1.HOUSING : PBT (UL 94V-0).
2.TERMINAL : COPPER ALLOY.GOLD PLATING
ON CONTACT TIN PLATING ON TAIL
3.FRONT SHIELD : BRASS TIN PLATING (t=0.30mm)
4.BACK SHIELD : BRASS NICKEL PLATING (t=0.30mm)
SPECIFICATION
1.CURRENT RATING : 0.3 AMP. MAX.
2.DIELECTRIC WITHSTANDING VOLTAGE :
500V AC R.M.S. FOR ONE MINUTE.
3.INSULATION RESISTANCE : 100M OHMS MIN. AT 500V DC.
4.CONTACT RESISTANCE : 50m OHMS MAX.
5.OPERATING TEMPERATURE : -25°C TO +85°C
6.DURABILITY : 5000 CYCLES.
7.MATING FORCE : 5kgs MAX
8.UNMATING FORCE :0.4~3.0kgs
9.MAX PROCESSING TEMPERATURE :
230°C FOR 30~60 SECONDS. (HI.-TEMP. PLASTIC)

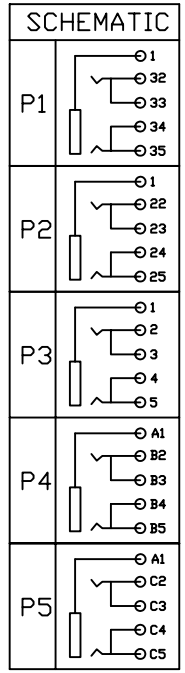


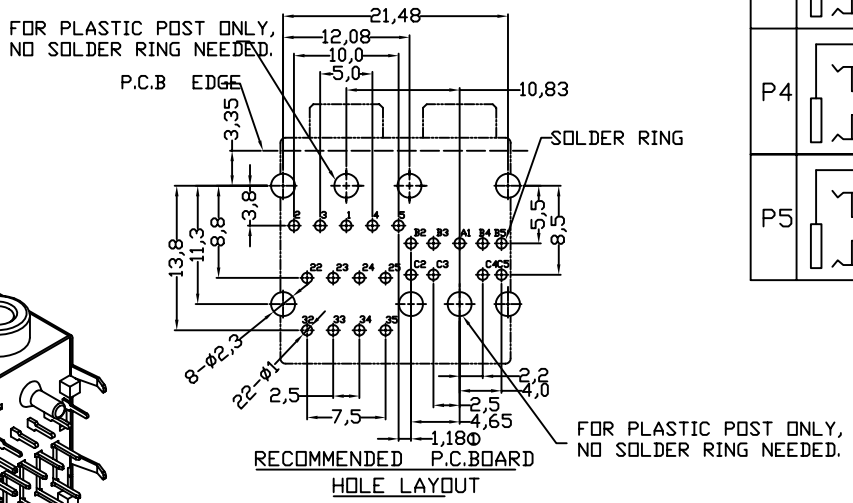


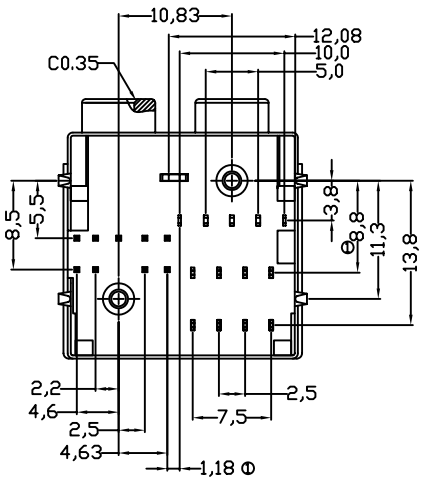


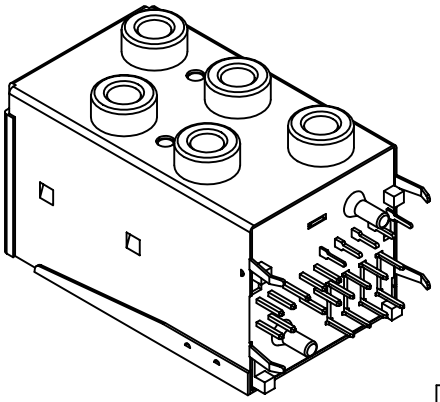

| No. | P1 | P2 | P3 | P4 | P5 |
|---|---|---|---|---|---|
| COLOUR | BLUE | AQUA | PINK | YELLOW | BLACK |

RoHS Compliant

MORETHANALL
PCB CONNECTORS
Cable ASSEMBLIES
煜倫股份有限公司
www.morethanall.com

| | |
|---|---|
| DRAWING BY CY | |
| CHECKED BY GENIUS | |
| UNIT / mm | SCALE 1 : 1 |
| DATE | |
| SIZE A4 | PPOJECTION |

TOLERANCES ARE
X. ±
.X ± 0.30
.XX ± 0.20
.XXX ± 0.10
ANG ± 1°

照片框

ORDER INFORMATION

PJC1B1-RBAPYK-22-LF

SERIES
DIP 90°
COLOUR P1~P5
22 WAY
LEADFREE

DESCRIPTION: 五層JACK