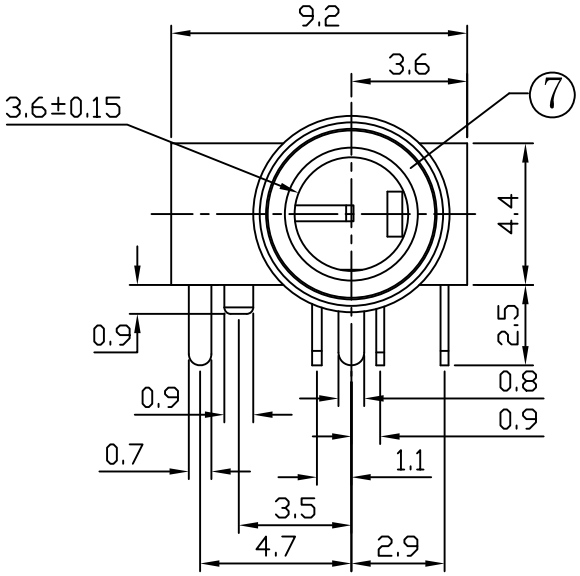

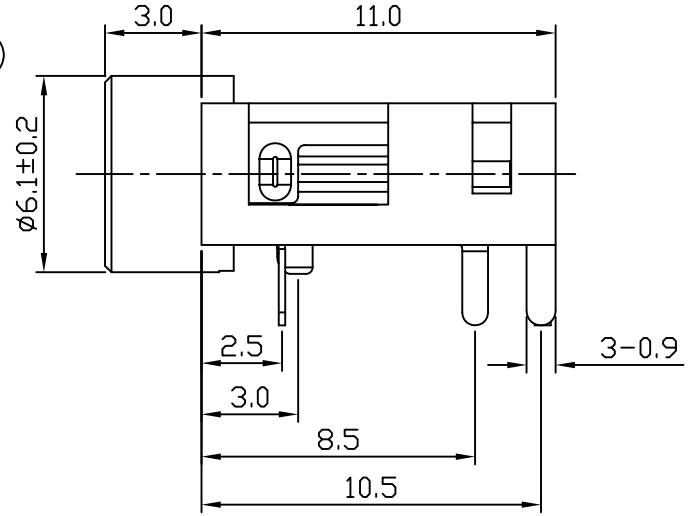

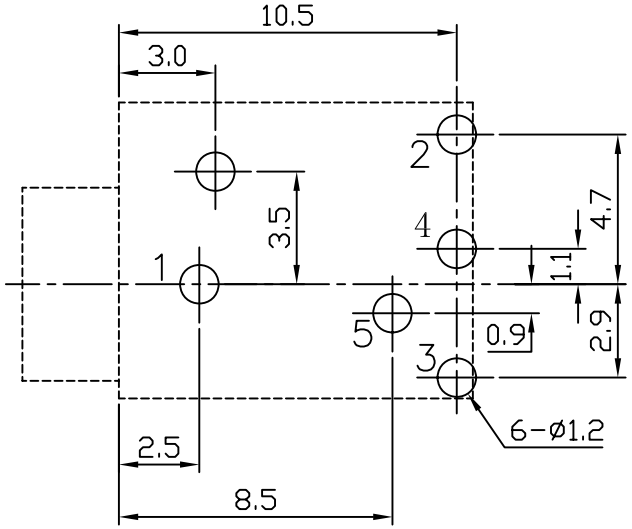

T:1.6 Dimensions of PC board holes

Tolerance : ±0.05(Printed-top view)

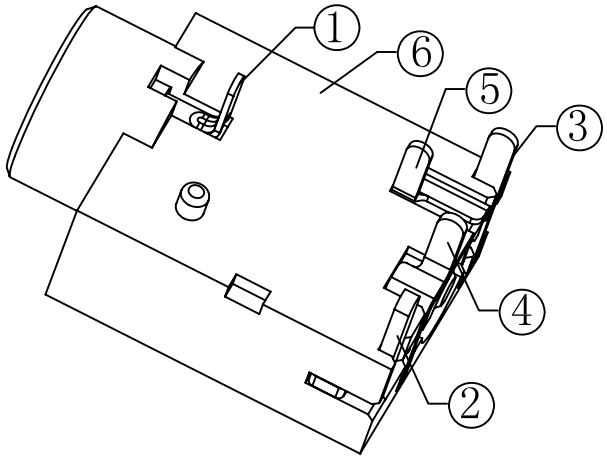

SCHEMATIC

PJ-R30-05C

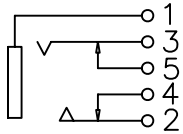

LTR	PART NAME	QTY	MATERIAL	REMARK
7	AXIS SUPPORT	1	H59(COPPER ALLOY)	Sn PLATED
6	HOUSING	1	PBT	UL-94V0(BLACK)
5	CONTACT FOOT	1	C2680 t=0.25	Ag PLATED
4	CONTACT FOOT	1	C2680 t=0.30	Ag PLATED
3	CONTACT FOOT	1	C5191 t=0.25	Ag PLATED
2	SPRING PIECE	1	C5191 t=0.25	Ag PLATED
1	CONTACT FOOT	1	C5191 t=0.20	Ag PLATED

UNLESS OTHERWISE SPECIFIED, TOLERANCE ON DECIMAL: ±0.3

RoHS Compliant

MORETHANALL PCB CONNECTORS Cable ASSEMBLIES

煜倫股份有限公司

www.morethanall.com

DRAWING BY CY		TOLERANCES ARE
CHECKED BY GENIUS		X. ±
UNIT / mm	SCALE 1 : 1	.X ±
		.XX ±
DATE		.XXX ±
		ANG ±
SIZE A4	PPOJECTION	

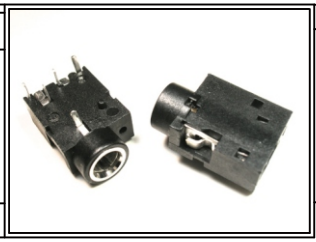

ORDER INFORMATION

PJ-R30-05C-LF

SERIES

DIP 90°

POST 3.0mm

5P3C

LEADFREE

DESCRIPTION: