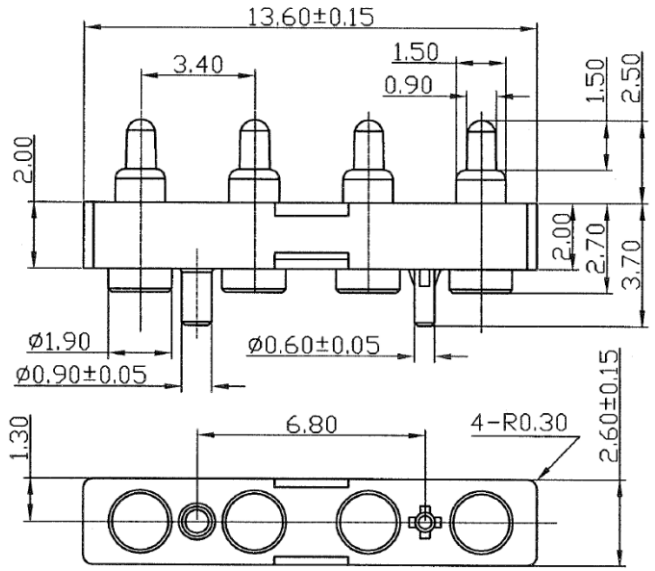

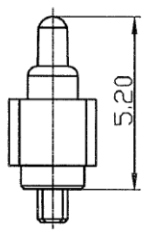

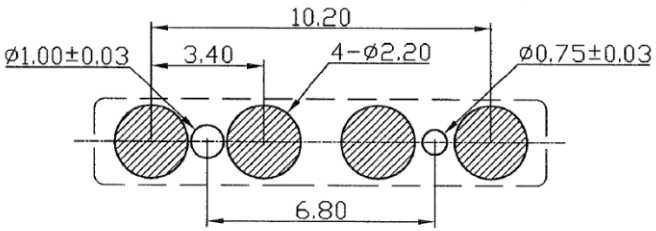

PCB LAYOUT

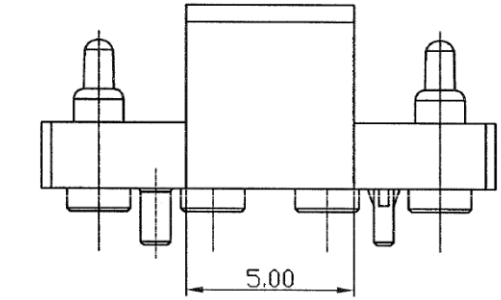

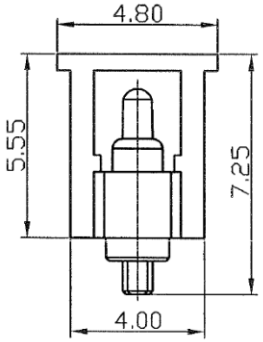

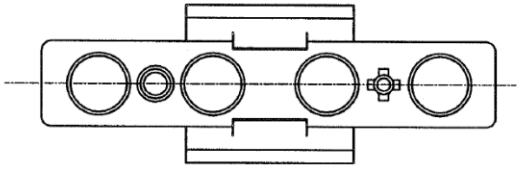

NOTES:

1.MATERIAL:
- HOUSING & CAP:THERMOPLASTIC, UL94V-0 RATED.
- PIN:COPPER ALLOY
- SHAFT:COPPER ALLOY
- SPRING:SWP-B

2.FINISH:
- CONTACT:50u" MIN NICKEL UNDER -PLATING ALLOVER.
- 15u" GOLD PLATING ON CONTACT AREA.
- 4u" GOLD PLATING ON SOLDER TAIL.

3.STROKE:1.0mm, CONTACT FORCE:100.0±15g.

RoHS Compliant

MORETHANALL PCB CONNECTORS Cable ASSEMBLIES

煜倫股份有限公司

www.morethanall.com

DRAWING BY CY		TOLERANCES ARE
CHECKED BY GENIUS		X. ±
UNIT / mm	SCALE 1 : 1	.X ±
		.XX ±
		.XXX ±
DATE		ANG ±
SIZE A4	PPOJECTION	

照片框

ORDER INFORMATION

PGP34-V52P1C-1X04-LF

SERIES
180°SMT
POST
TOTAL HIGH 5.2mm
CAP
04 WAY
LEADFREE

DESCRIPTION:USB AM/AF L=500cm