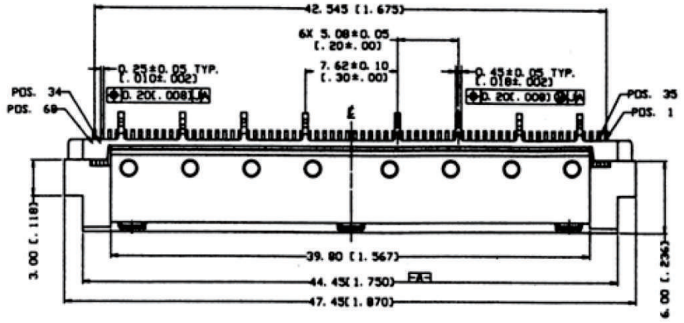

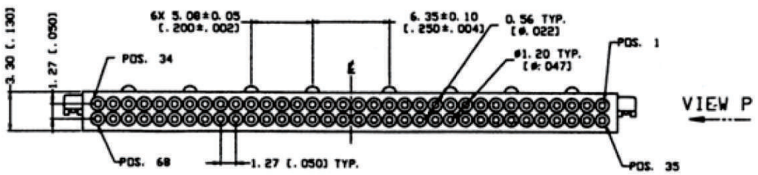

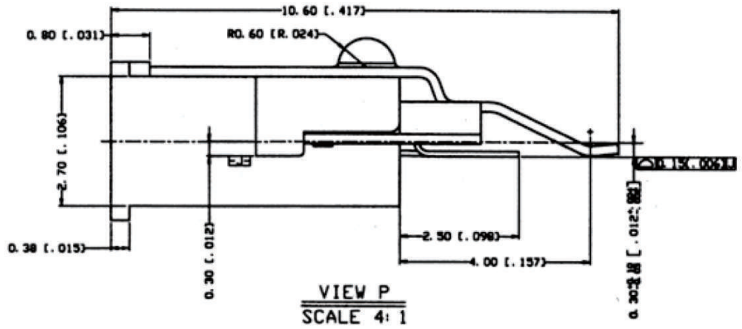

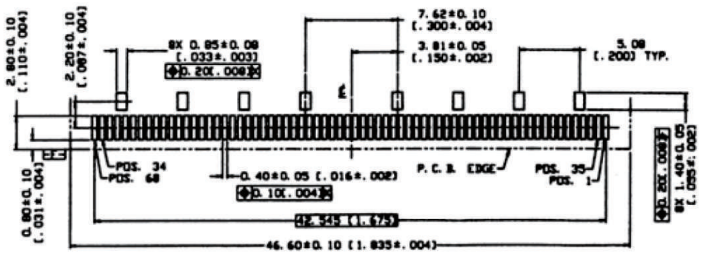

RECOMMENDED P. C. B. LAYOUT

NOTES:

1. CONNECTOR TO COMPLY WITH PCMCIA PC CARD STANDARD RELEASE 8.0
2. ELECTRICAL CHARACTERISTICS:
   - 2-1. CURRENT RATING: 0.5 AMP. MAX PER CONTACT
   - 2-2. LOW LEVEL CONTACT RESISTANCE: 40 mOhms MAX INITIAL DIFFERENCE OF 20 mOhms MAX. AFTER TEST
   - 2-3.DIELECTRIC WITHSTANDING VOLTAGE: 500V AC MIN. FOR 1 MINUTE, WITH 1 Mamp. MAX. CURRENT LEAKAGE
   - 2-4.INSULATION RESISTANCE: 1000 MOhms MIN. INITIAL AT 500V DC, 100 MOhms MIN. AFTER TEST AT 500V DC
3. MECHANICAL CHARACTERISTICS:
   - 3-1.CONNECTOR MATING FORCE: 4.00 Kgf MAX
   - 3-2.CONNECTOR UNMATING FORCE: 0.68Kgf MIN
   - 3-3.DURABILITY: 10000 CYCLES AT OFFICE 5000 CYCLES AT HARSH CONDITION
4. ENVIRONMENTAL CHARACTERISTICS:
   - 4-1.OPERATING TEMPERATURE: -20°C TO 60°C (INCLUDING TERMINAL TEMPERATURE RISE)
   - 4-2.VIBRATION: NO CURRENT INTERRUPTION GREATER THAN 100 ns
5. MATERIAL:
   - 5-1.INSULATION MATERIAL: GLASS FILLED LCP
     FLAMMABILITY: UL 94v-0
     COLOR: BLACK
   - 5-2.CONTACT MATERIAL: COPPER ALLOY
6. PLATING:
   - 6-1.UNDERPALTE: 50u" NICKEL
   - 6-2.WIPING AREA:10u" GOLD

RoHS Compliant

MORETHANALL PCB CONNECTORS Cable ASSEMBLIES

煜倫股份有限公司

www.morethanall.com

DRAWING BY CY		TOLERANCES ARE
CHECKED BY GENIUS		X. ± 0.25 .X ± 0.20 .XX ± 0.15 .XXX ± 0.10 ANG ±
UNIT / mm	SCALE 1 : 1	
DATE		
SIZE A4	PPOJECTION	

照片框

ORDER INFORMATION

PCC-SWA03M-68-LF

SERIES | FEMALE | 90°SMT | A TYPE | OFFSET 0.3mm | METAL | 68WAY | LEADFREE

DESCRIPTION: