TECHNICAL CHARACTRISTICS

1. General Characteristics

Dimensions: 85.55L x 59.80W x 13.40H mm
85.55L x 59.80W x 15.40H mm
85.55L x 59.80W x 18.40H mm
85.55L x 59.80W x 23.40H mm
Standoff H= 8.00, 10.00, 13.00, 18.00 mm
Weight: Approx. 13.73 g
Contact principle: Friction technology
Operating position: Shaft up / Down / Horizontal
Mounting System: DIP Type (Board-lock type)
Durability: 10,000 cycles min.

2. Mechanical Characteristics

Insulation material: Thermoplastic, UL 94V-0
RoHS Directive 2011/65/EU Compliant

3. Electrical Characteristics

Number of contacts: 68 pins
Contact resistance: 40 mΩ max. initial
Insulation resistance: >1000 MΩ / 500 VDC

4. Solderability

Wave: 260°C, 5 sec. Max.
IR reflow: Not applicable
Manual soldering: 360°C, 3 sec. Max.

5. Environmental Characteristics

Operating temperature: - 20°C ~ + 60°C
Operating humidity: 95 % RH Max.
Storage temperature: - 40°C ~ + 70°C
Storage humidity: 95 % RH Max.

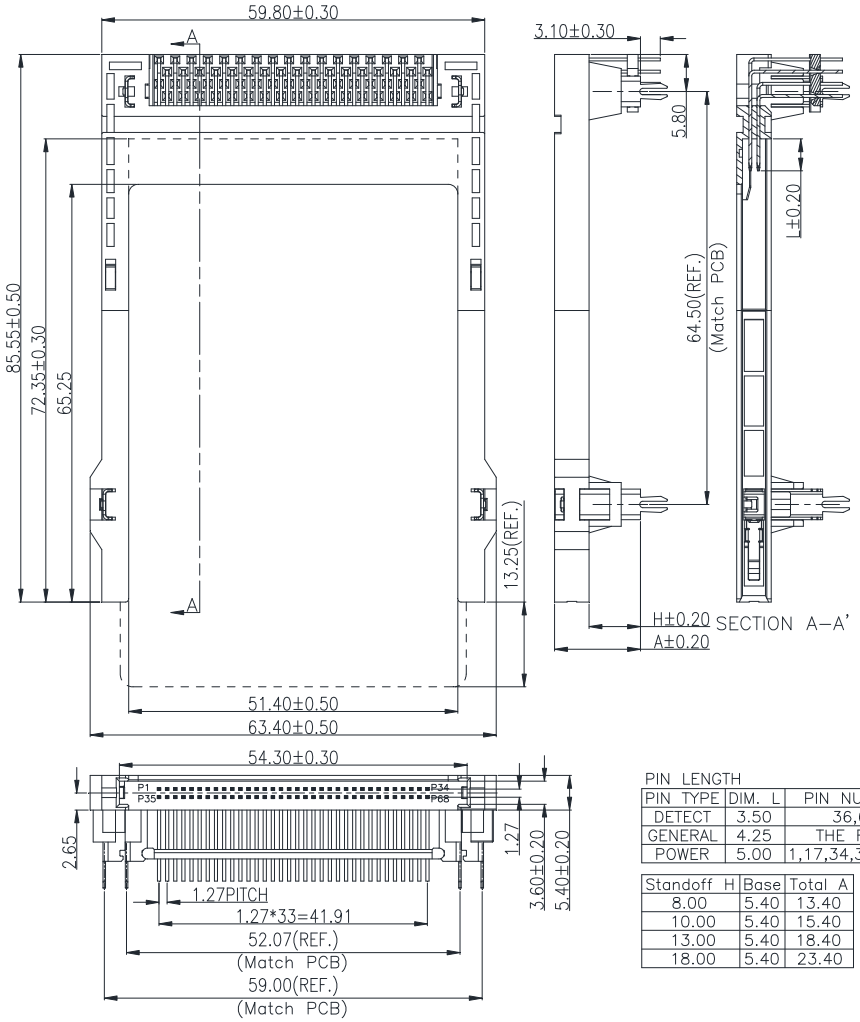

Unit: mm; Tolerances: ±0.15 mm
Mechanical outline dimension

PIN LENGTH

PIN TYPE	DIM. L	PIN NUMBER
DETECT	3.50	36,67
GENERAL	4.25	THE REST
POWER	5.00	1,17,34,35,51,68

Standoff H	Base	Total A
8.00	5.40	13.40
10.00	5.40	15.40
13.00	5.40	18.40
18.00	5.40	23.40

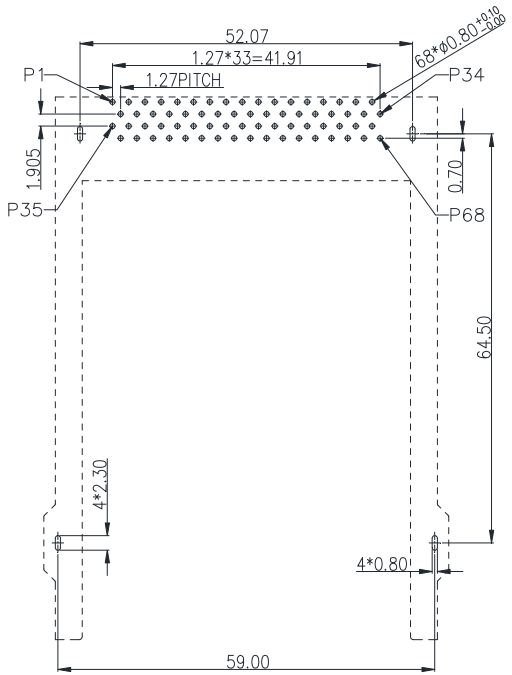

Unit: mm; Tolerances: ±0.05 mm
Reference dimension for PCB layout

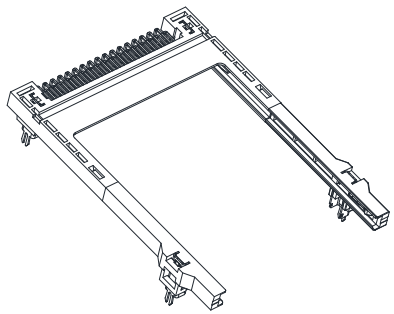

RoHS Compliant

MORETHANALL PCB CONNECTORS Cable ASSEMBLIES
煜倫股份有限公司
www.morethanall.com

		TOLERANCES ARE
DRAWING BY CY		X. ±
CHECKED BY GENIUS		.X ±
UNIT / mm	SCALE 1 : 1	.XX ±
		.XXX ±
DATE		ANG ±
SIZE A4	PPOJECTION	

照片框

ORDER INFORMATION

PCC-PRLxxxV3-68-LF

SERIES
MALE
DIP 90°
LONG RAIL
080:8.00mm
100:10.00mm
130:13.00mm
180:18.00mm
3.3V
68 WAY
LEADFREE

DESCRIPTION: **PCMCIA Card Connector**