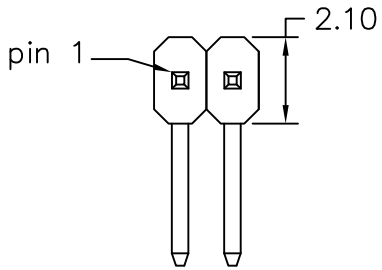

MATERIAL

Contact Pin : Brass

SPECIFICATION

Current Rate : 1 AMP
Insulation Resistance : 5000MΩMin. at DC 500V
Contact Resistance : 20mΩMax. at DC 100mA
Dielectric Voltage : AC 500V for one minute

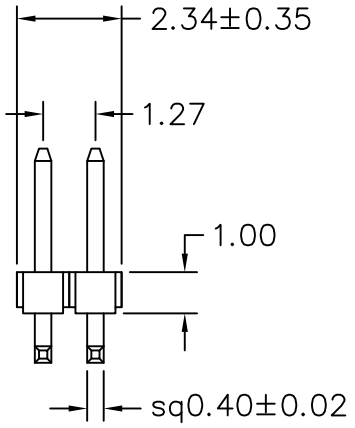

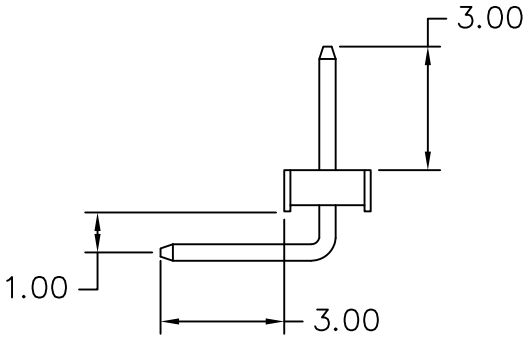

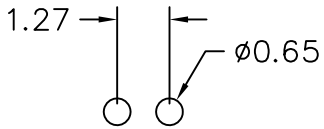

Recommended P.C.B Layout

RoHS Compliant

MORETHANALL
PCB CONNECTORS
Cable ASSEMBLIES
煜倫股份有限公司
www.morethanall.com

DRAWING BY CY		TOLERANCES ARE
CHECKED BY GENIUS		X. ±
UNIT / mm	SCALE 1 : 1	.X ± 0.30
		.XX ± 0.20
DATE		.XXX ±
		ANG ± 3°
SIZE A4	PPOJECTION	

照片框

ORDER INFORMATION

PA-R10103030-1X02-LF

SERIES
DIP 90°
BASE 1.0mm
R/A 1.0mm
CONTACT 3.0mm
DIP 3.0mm
02WAY
LEADFREE

DESCRIPTION: PIN HEADER 1.27*1.27mm RIGHT ANGLE TYPE, SINGLE ROW