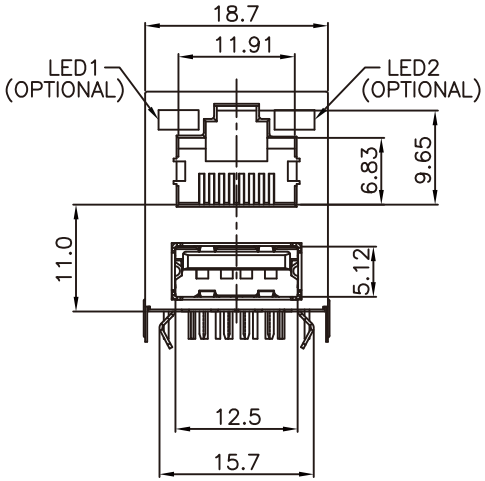


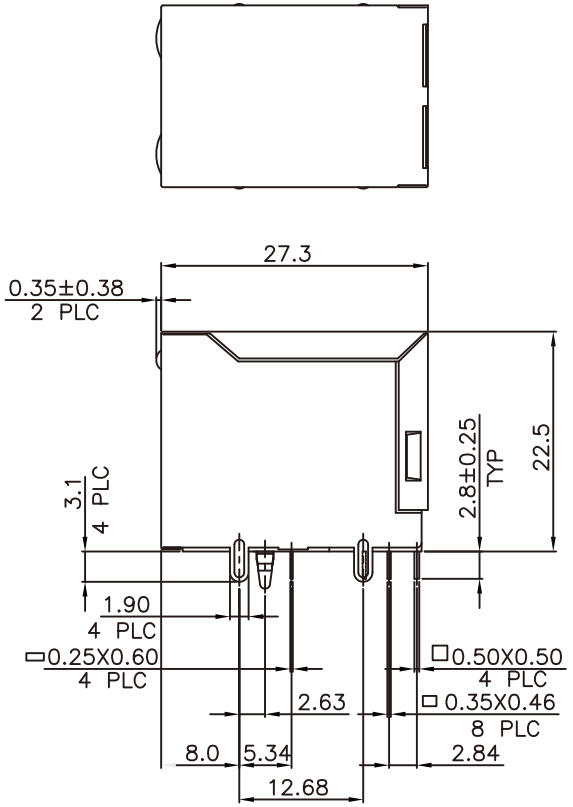


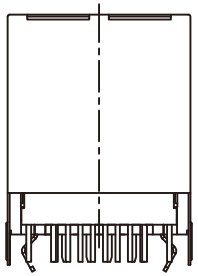

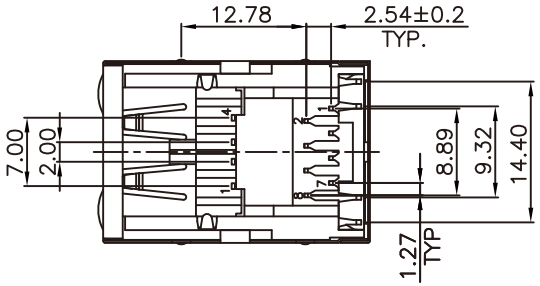


MATERIAL:

- HOUSING & COVER–PBT POLYESTER UL94V–0
  MIXED GLASS FIBER.
  STANDARD COLOR–GRAY OR BLACK.
- CONTACTS–0.35mm THICK PHOS–BRONZE PLATED WITH HARD GOLD AND GOLD FLASH IN SOLDER AREA.
- SHIELD–0.20mm TIHCK COPPER ALLOY, PLATED WITH NICKEL.

USB:

- HOUSING–PBT POLYESTER UL94V–0
  MIXED GLASS FIBER.
  STANDARD COLOR–GRAY.
- CONTACTS–0.25mm THICK PHOS–BRONZE PLATED WITH HARD GOLD AND TIN PLATED IN SOLDER AREA.
- SHIELD–0.30mm THICK SPCC, 80u" MIN. NICKEL PLATED.

CAVITY CONFIRMS TO FCC RULES AND REGULATIONS PART 68,SUBPART F.

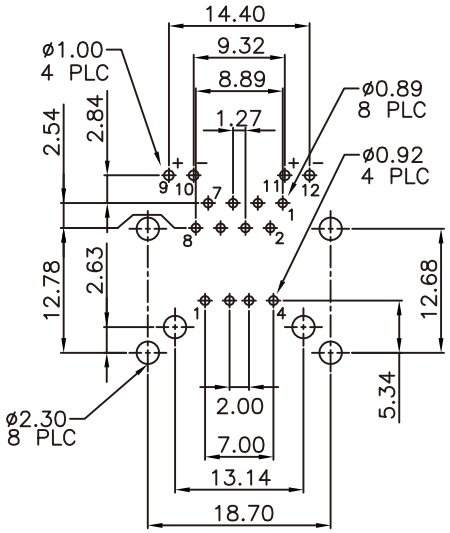


PCB LAYOUT

Ref.

RoHS Compliant

MORETHANALL
PCB CONNECTORS
Cable ASSEMBLIES
煜倫股份有限公司
www.morethanall.com

| | | |
|---|---|---|
| DRAWING BY CY | | TOLERANCES ARE |
| CHECKED BY GENIUS | | X. ± |
| UNIT / mm | SCALE 1 : 1 | .X ± 0.25 |
| DATE | | .XX ± 0.13 |
| | | .XXX ± 0.05 |
| | | ANG ± |
| SIZE A4 | PPOJECTION | |

照片框

**ORDER INFORMATION**

MUJL-Rxx-88A1-LF

- SERIES
- DIP 90°
- GY:GREEN / YELLOW (LED1 / LED2)
- YG:YELLOW / GREEN (LED1 / LED2)
- 8P8C TO 4 PIN A TYPE
- LEADFREE

DESCRIPTION: MODULAR JACK, RJ45 STACKED OVER USB CONN, WITH LED, DIP TYPE