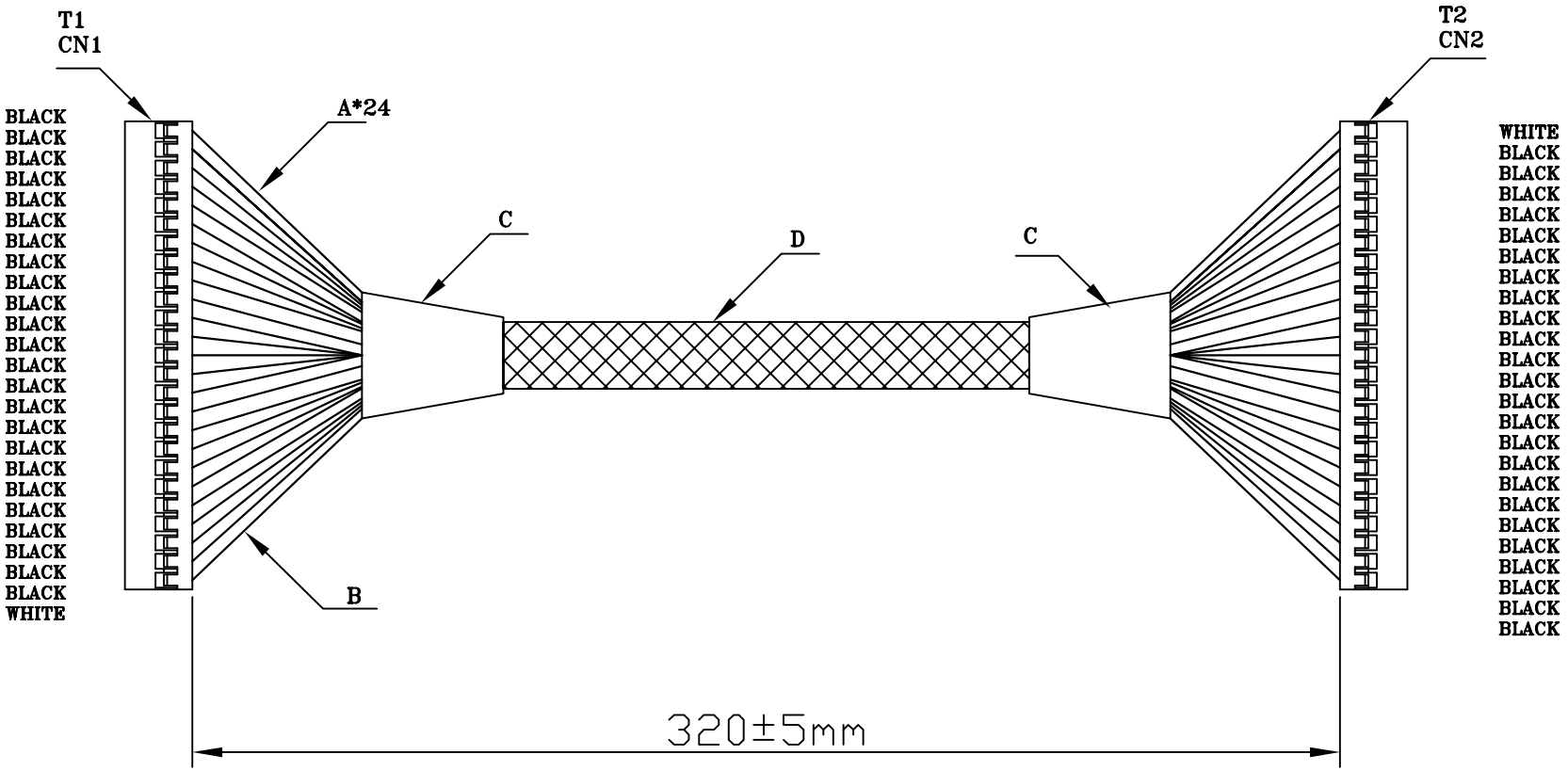

A*24	UL1007 #28 BLACK
B	UL1007 #28 WHITE
C*2	熱縮套管 BLACK
D	CF/BSPET-FR4
T1*25	MPV-T-26
T2*25	MPV-T-26
CN1	MPV-H-2X25
CN2	MPV-H-2X25

RoHS Compliant

MORETHANALL
PCB CONNECTORS
Cable ASSEMBLIES
煜倫股份有限公司
www.morethanall.com

DRAWING BY CY		TOLERANCES ARE
CHECKED BY GENIUS		X. ±
UNIT / mm	SCALE 1 : 1	.X ±
		.XX ±
		.XXX ±
DATE		ANG ±
SIZE A4	PPOJECTION	

照片框

ORDER INFORMATION

MPVX2-B25B2528TB-F32C-LF

- SERIES
- 50 WAY TO 50 WAY
- 28 AWG
- TUBE
- FEMALE TO FEMALE
- 320mm
- LEADFREE

DESCRIPTION: