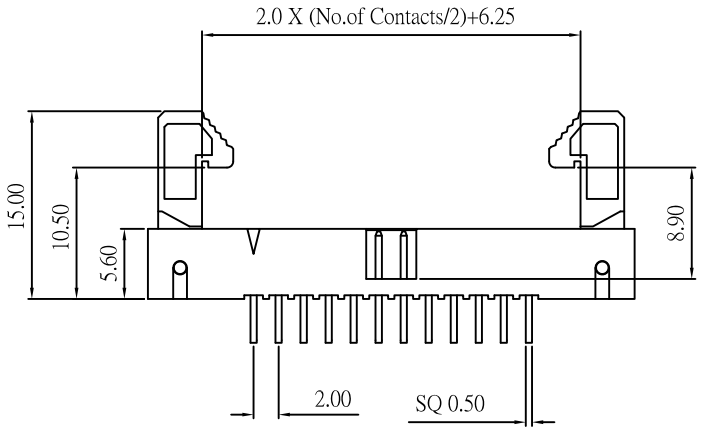

Recommended P.C. Board
SMD Layout

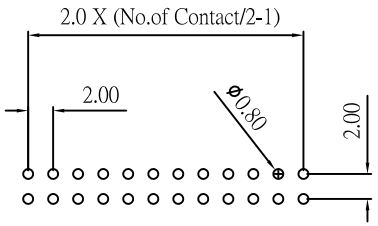

Current Rating and Voltage: 2 Amps 250V AC (r.m.s)
Insulator Resistance: 5000 Megohms min
Contact Resistance: 20 m ohms max
Dielectric Withstanding: 500 V AC
Operating Temperature: - 40° ~ +105° C
Max Processing Temp: 230° C for 60 seconds
Max Processing Temp: 260° C for 10 seconds
Contact Material: Copper Alloy
Standard: Brass
Insulator Material: High Temperature
Plastic,UL 94V-0
Finish: Standard: Gold Flash all over

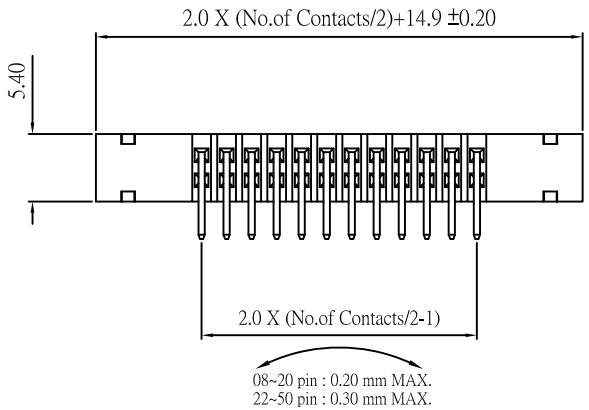

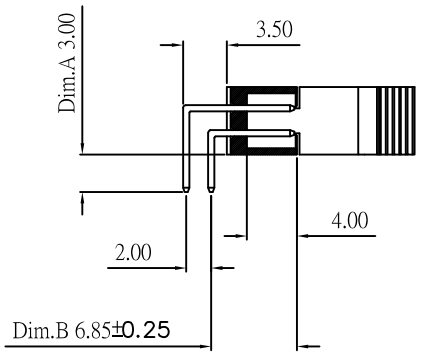

RoHS Compliant

MORETHANALL
PCB CONNECTORS
Cable ASSEMBLIES
煜倫股份有限公司
www.morethanall.com

DRAWING BY CY		TOLERANCES ARE
CHECKED BY GENIUS		X. ± .X ± 0.30 .XX ± 0.20 .XXX ± 0.10 ANG ±
UNIT / mm	SCALE 1 : 1	
DATE		
SIZE A4	PPOJECTION	

照片框

ORDER INFORMATION

ML-R-xxx-LF

SERIES
DIP 90°
008~050 WAY
LEADFREE

DESCRIPTION: