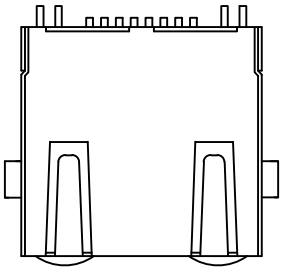

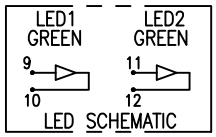

MATERIAL:

- HOUSING–PA9T GN2330
  HEAT RESISTANT PLOYAMIDE RESIN
  BLACK COLOR, UL94V–0
- INSERT HOUSING–DSM STANYL TE250F6 (NYLON–46)
  HEAT DEFLCTION TEMP.290°
  BLACK COLOR, UL94V–0.
- CONTACTS –0.35mm THICK PHOS–BRONZE PLATED
  WITH 6u" HARD GOLD AND GOLD FLASH IN
  SOLDER AREA.
- SHIELD –0.25mm TIHCK COPPER ALLOY,
  PLATED WITH NICKEL.

CAVITY CONFIRMS TO FCC RULES AND REGULATIONS
PART 68,SUBPART F.

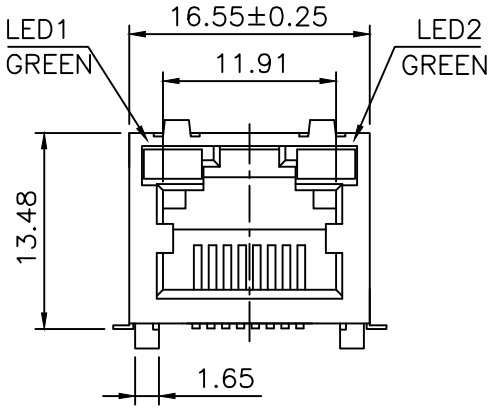

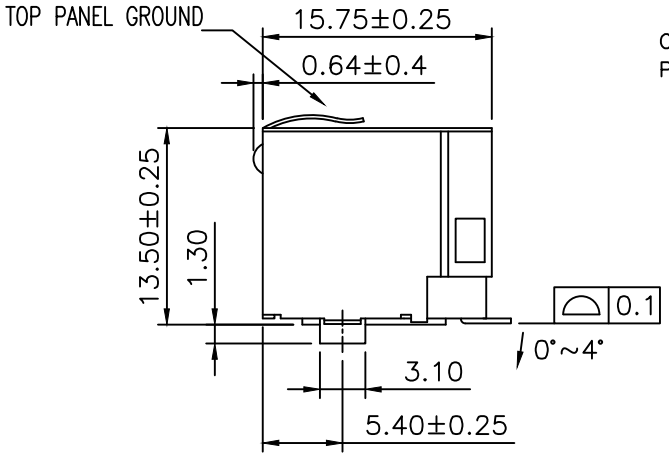

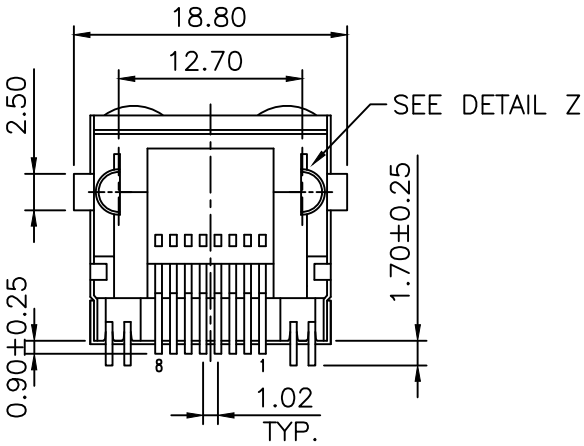

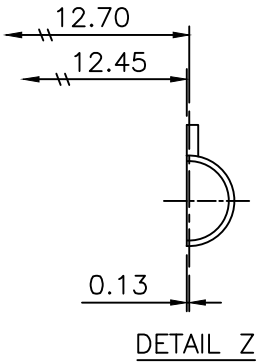

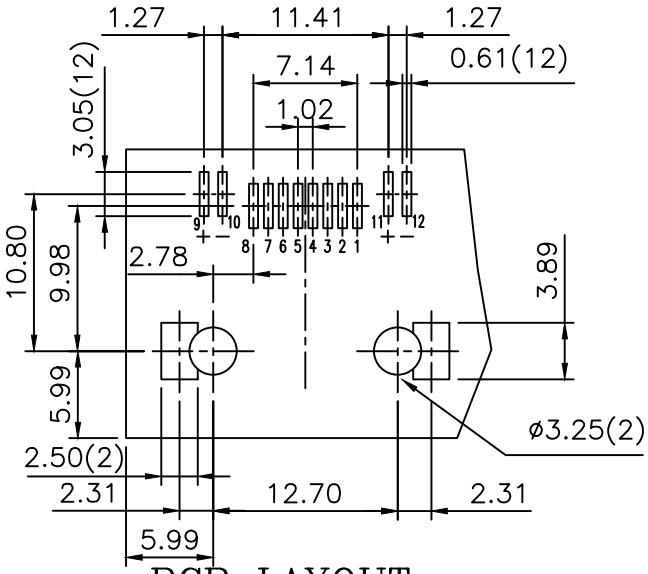

PCB LAYOUT
Ref.

RoHS Compliant

MORETHANALL
PCB CONNECTORS
Cable ASSEMBLIES
煜倫股份有限公司
www.morethanall.com

DRAWING BY CY		TOLERANCES ARE
CHECKED BY GENIUS		X. ±
UNIT / mm	SCALE 1 : 1	.X ± 0.25
DATE		.XX ± 0.20
		.XXX ± 0.10
		ANG ±
SIZE A4	PPOJECTION	

照片框

ORDER INFORMATION

MJWF13UL-KT06EP1GG-0808-LF

- SERIES
- BLACK
- TOP SPRING
- 06u"GOLD
- EAR+POST/1
- LED1 GREEN / LED2 GREEN
- 8P8C
- LEADFREE

DESCRIPTION: MODULAR JACK, RJ45, WITH LED'S SHIELDED, SMT TYPE, SIDE ENTRY