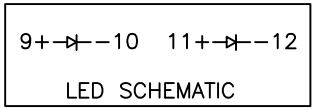

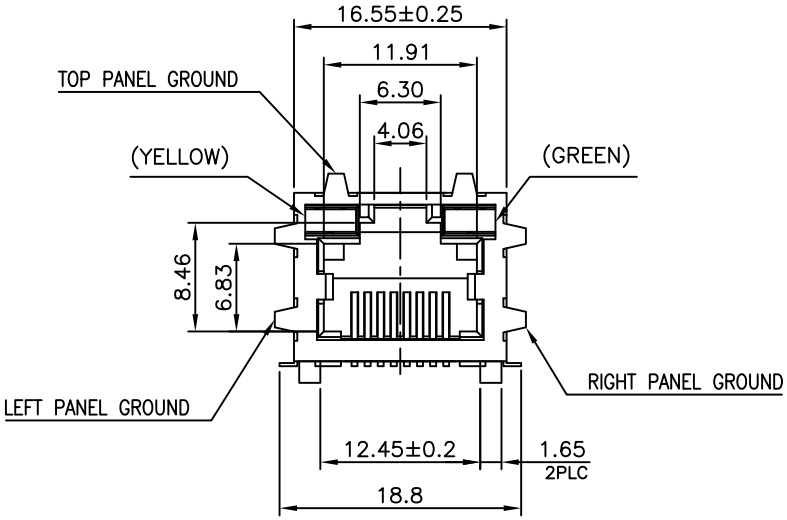

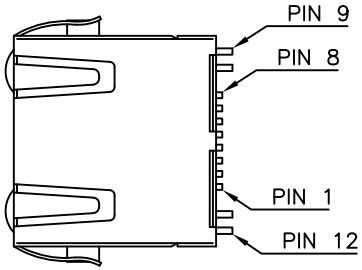

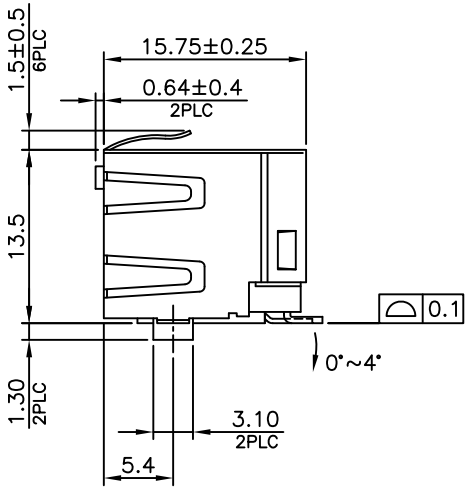

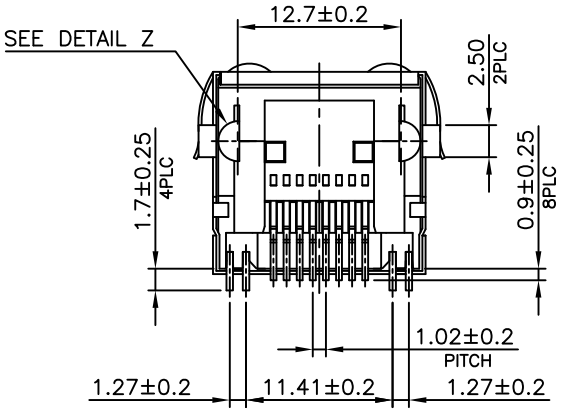

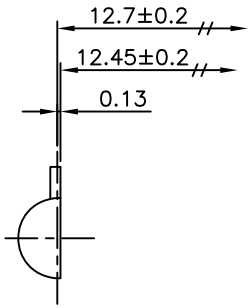

DETAIL Z
SCALE 2:1

NOTE:

CAVITY CONFIRMS TO FCC RULES AND REGULATIONS PART 68, SUBPART F.

1. MATERIAL:
   - 1.1 HOUSING & INSERT HOUSING: PA9T, WITH GLASS FIBER, UL94V−0, STANDARD COLOR−BLACK.
   - 1.2 CONTACTS: PHOSPHOR BRONZE.
   - 1.3 SHELL: BRASS.
   - 1.4 LED SOLDER TAIL: STEEL.

2. FINISH:
   - 2.1 CONTACTS: 0.152μm [6μ"]GOLD PLATED ON CONTACT AREA, GOLD FLASH ON SOLDER TAIL, 1.27μm [50μ"] MIN. NICKEL UNDERPLATED OVERALL.
   - 2.2 SHELL: 0.508μm [20μ"] MIN. NICKEL PLATED.
   - 2.3 LED SOLDER TAIL: 2.032μm [80μ"] MIN. TIN PLATED.

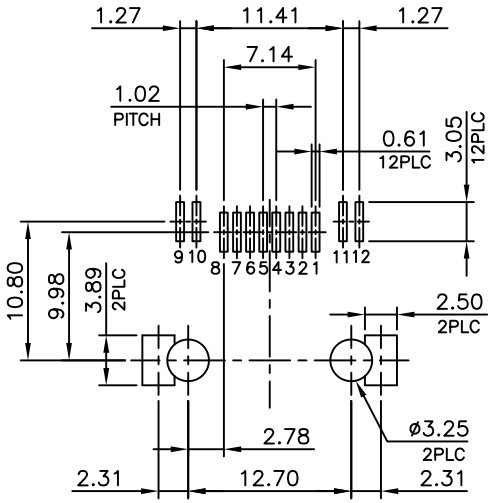

RECOMMENDED PCB LAYOUT
PCB THICKNESS: 1.6mm
TOLERANCE: ±0.05mm (TOP VIEW)

RoHS Compliant

MORETHANALL
PCB CONNECTORS
Cable ASSEMBLIES
煜倫股份有限公司
www.morethanall.com

DRAWING BY CY		TOLERANCES ARE
CHECKED BY GENIUS		X. ±
UNIT / mm	SCALE 1 : 1	.X ±
		.XX ±
DATE		.XXX ±
		ANG ±
SIZE A4	PPOJECTION	

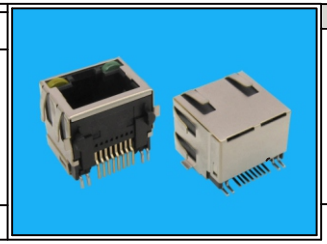

ORDER INFORMATION

MJWF13UL-KF06EP1YG-0808-LF

- SERIES
- BLACK
- 06u"GOLD FULL SPRING
- EAR+POST/1
- YELLOW / GREEN
- 8P8C
- LEADFREE

DESCRIPTION: MODULAR JACK, RJ45, WITH LED'S SHIELDED, SMT TYPE, SIDE ENTRY