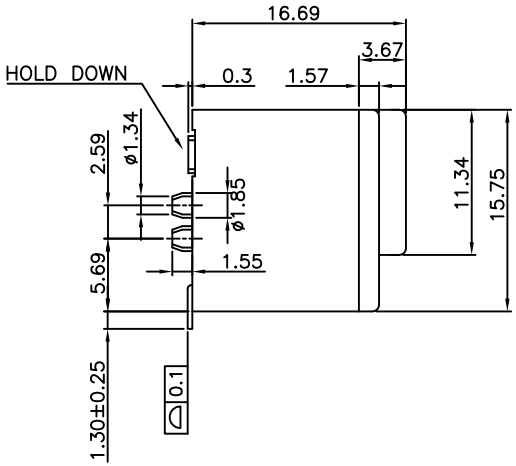

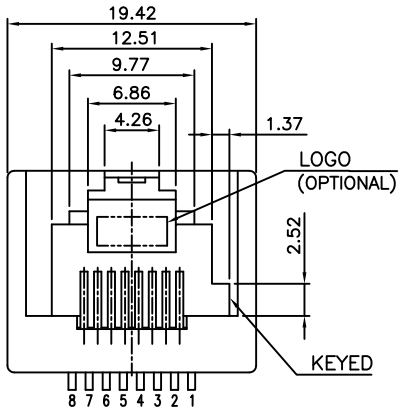

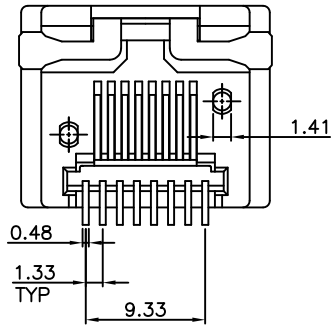

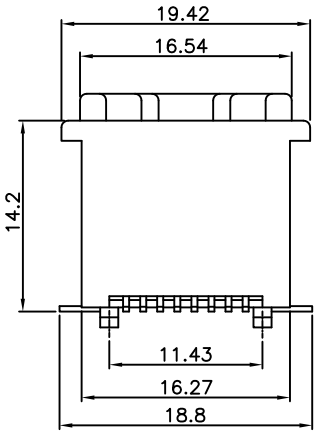

MATERIALS:

- HOUSING–PA9T GN2330
  HEAT RESISTANT PLOYAMIDE RESIN
  BLACK COLOR, UL 94V–0
- CONTACTS–0.35mm THICK PHOS–BRONZE
  PLATED WITH HARD GOLD AND
  GOLD FLASH IN SOLDER AREA.
- HOLD DOWN–0.40mm THICK COPPER ALLOY,
  PLATED WITH TIN.

CAVITY CONFIRMS TO FCC RULES AND REGULATIONS
PART 68,SUBPART F.

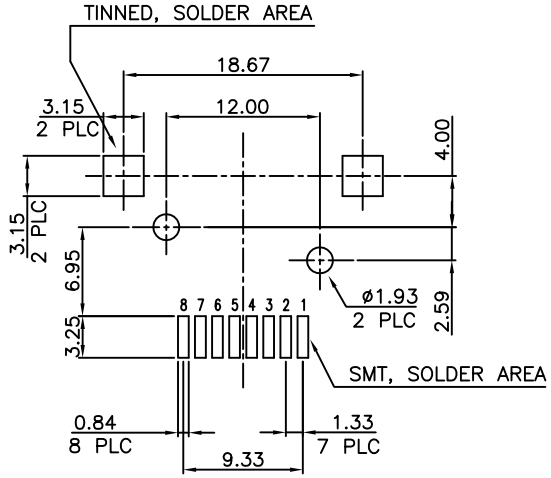

PCB LAYOUT
Ref.

RoHS Compliant

MORETHANALL
PCB CONNECTORS
Cable ASSEMBLIES
煜倫股份有限公司
www.morethanall.com

DRAWING BY CY		TOLERANCES ARE
CHECKED BY GENIUS		X. ± .X ± .XX ± .XXX ± ANG ±
UNIT / mm	SCALE 1 : 1	
DATE		
SIZE A4	PPOJECTION	

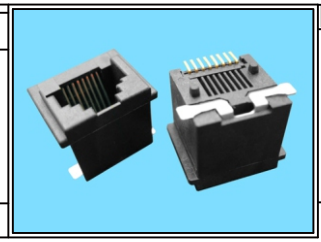

ORDER INFORMATION

MJVS14-KE06EP-0808K-LF

SERIES
BLACK EAR
EAR
06u" GOLD
POST
8P8C
KEY
LEADFREE

DESCRIPTION: RJ45, TOP ENTRY JACK SMT TYPE