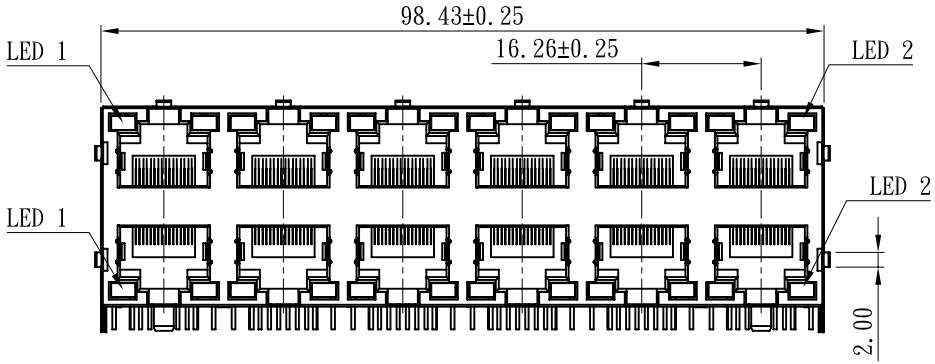

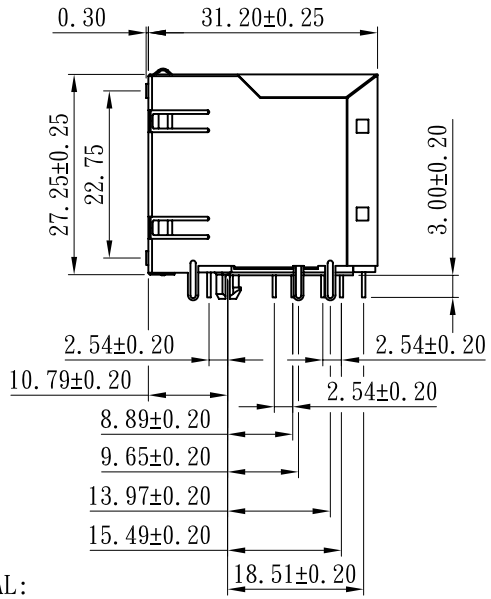

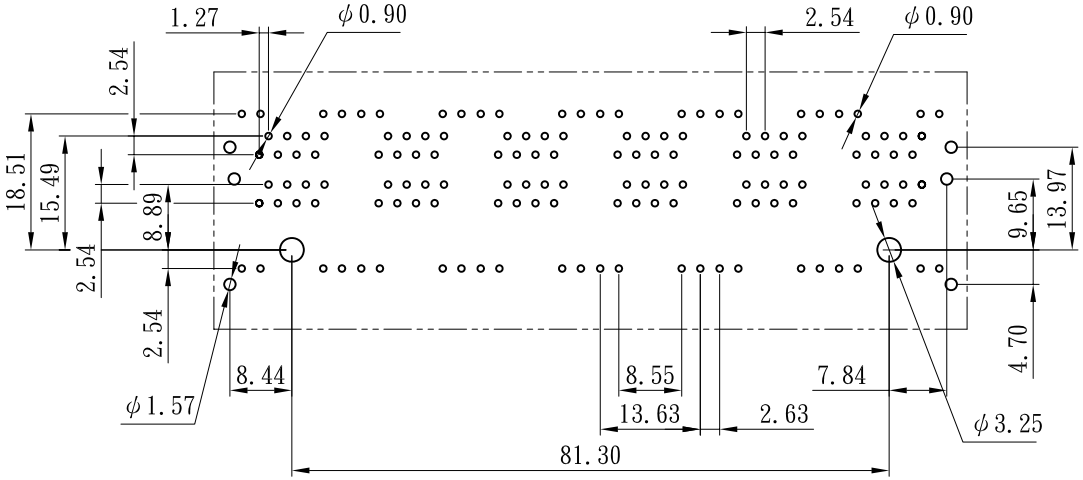

RECOMMENDED PCB LAYOUT

NOTES:

ELECTRICAL:

1. VOLTAGE RATING:125VAC RMS.
2. CURRENT RATING:1.5AMP.
3. CONTACT RESISTANCE:42MILLIOHMS MAX.
4. INSULATION RESISTANCE:1000 MEGOHMS MIN @ 500 VDC.
5. DIELECTRIC STRENGTH:1000 VDC RMS 60HZ. 1MIN.

MECHANICAL:

1. HOUSING MATERIAL:NYLON 66, UL94V-0.
2. CONTACT MATERIAL:PHOSPHOR BRONZE φ0.46mm.
3. PLATING:GOLD PLATING OVER NICKEL.
4. OPERATING LIFE:250 CYCLES MIN.
5. PCB RETENTION PRE-SOLDER:1 LB MIN.
6. PCB RETENTION POST-SOLDER:10 LBS MIN.

ENVIRONMENTAL:

1. STORAGE:-40°C TO 85°C.
2. OPERATION:0°C TO 70°C.

RoHS Compliant

MORETHANALL CONNECTORS ASSEMBLIES	PART NO. MJF27ULB6-KF03A4GG-0808							
	DWG NO. MJF27ULB6-KF03A4GG-0808		CHECKED BY CY	TOLERANCES ARE .X ± 0.25 .XX ± 0.15 .XXX ± AWG	DESCRIP TION:	RJ45 2*4PORT 腳前4.57mm 有彈片 帶LED燈(W=3.3*T=1.9*L=4.0)		
	FILE NO.		DRAWING BY					
煜倫股份有限公司	UNIT / mm	SCALE 1:1	PROJECTION		AREA	REVISIONS	HK	DATE