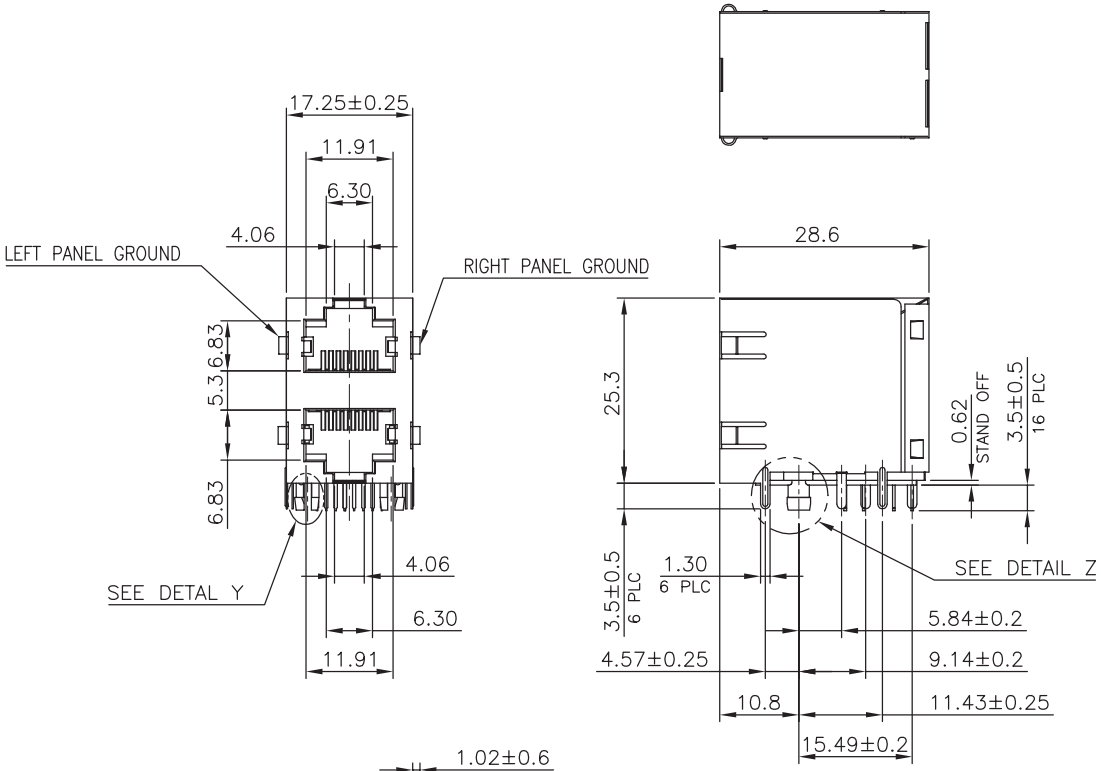

DETAIL Y
SCALE 2.5:1

NOTE:

CAVITY CONFIRMS TO FCC RULES AND REGULATIONS PART 68, SUBPART F.

1. MATERIAL:
   - 1.1 HOUSING: PBT, WITH GLASS FIBER, L94V−0, STANDARD COLOR−BLACK.
   - 1.2 INSERT HOUSING: PBT, WITH GLASS FIBER, UL94V−0, STANDARD COLOR−BLACK.
   - 1.3 COVER: PBT, WITH GLASS FIBER, UL94V−0, STANDARD COLOR−BLACK.
   - 1.4 CONTACTS: PHOSPHOR BRONZE.
   - 1.5 SHIELD: BRASS.

2. FINISH:
   - 2.1 CONTACTS: 1.27μm [50μ″]GOLD PLATED ON CONTACT AREA, 0.0254μm [1μ″] GOLD PLATED ON SOLDER TAIL, WITH ENTIRE CONTACT UNDERPLATED 1.27μm [50μ″] MIN. NICKEL
   - 2.2 SHELL: 0.508μm [20μ″] MIN. NICKEL PLATED.

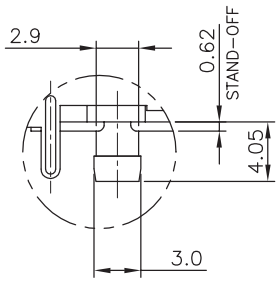

DETAIL Z
SCALE 2:1

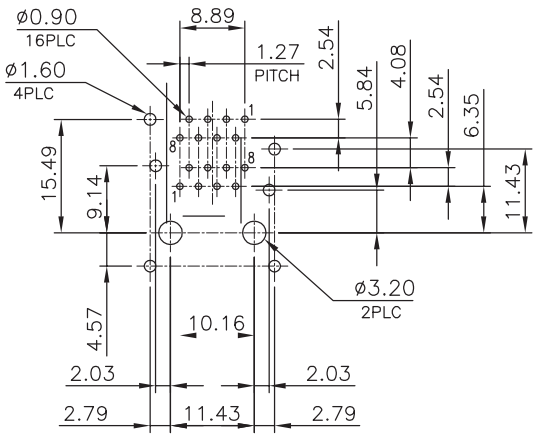

RECOMMENDED PCB LAYOUT
RECOMMENDED PCB THICKNESS: 1.6mm
TOLERANCE:±0.05mm (TOP VIEW)

RoHS Compliant

MORETHANALL PCB CONNECTORS Cable ASSEMBLIES
煜倫股份有限公司
www.morethanall.com

DRAWING BY CY		TOLERANCES ARE
CHECKED BY GENIUS		X. ±
UNIT / mm	SCALE 1 : 1	.X ± 0.25
DATE		.XX ± 0.13
		.XXX ± 0.05
		ANG ±
SIZE A4	PPOJECTION	

照片框

ORDER INFORMATION

MJF25B1-KF06A4-0808-LF

- SERIES
- BLACK
- FULL SPRING
- 06u" GOLD
- FRONT TAB 4.57mm
- 8P8C
- LEADFREE

DESCRIPTION: 2X1, 8POSITION, RIGHT ANGLE SHELL PCB JACK