MATERIAL:

- HOUSING–DSM STANYL TE250F6 (NYLON–46)
  HEAT DEFLCTION TEMP.290°
  BLACK COLOR, UL94V–0
- CONTACTS–0.35mm THICK PHOS–BRONZE PLATED WITH HARD GOLD AND GOLD FLASH ON SOLDER AREA.
- SHIELD –0.25mm THICK COPPER ALLOY, PLATED WITH NICKEL.

CAVITY CONFIRMS TO FCC RULES AND REGULATIONS PART 68,SUBPART F.

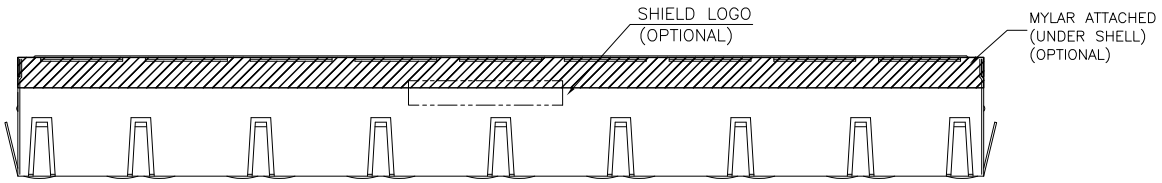

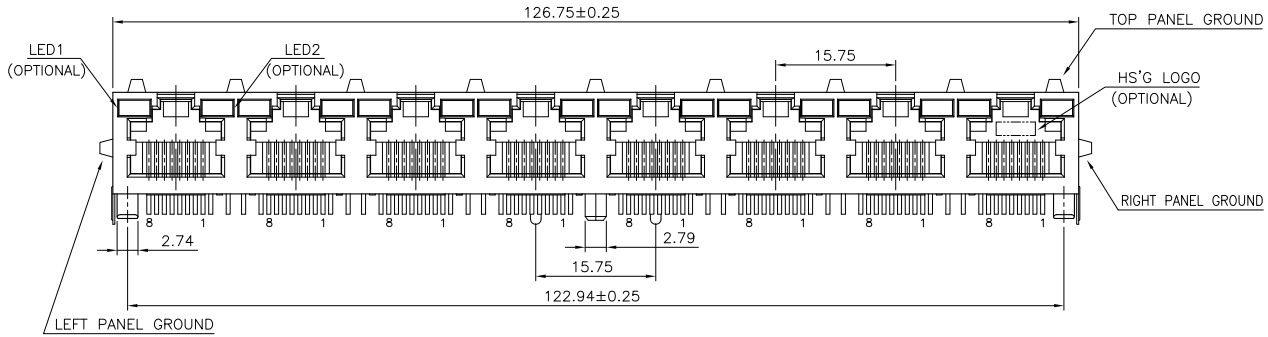

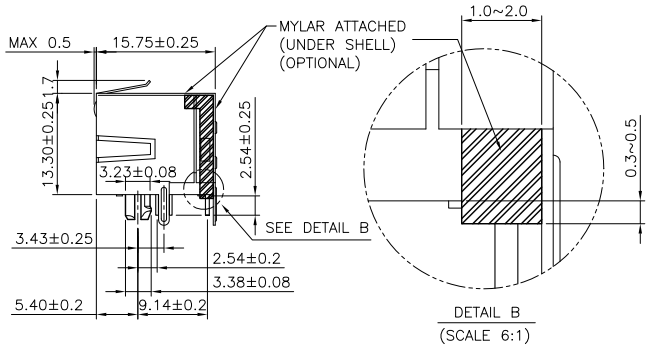

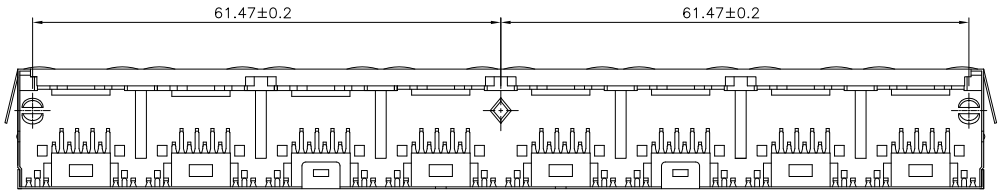

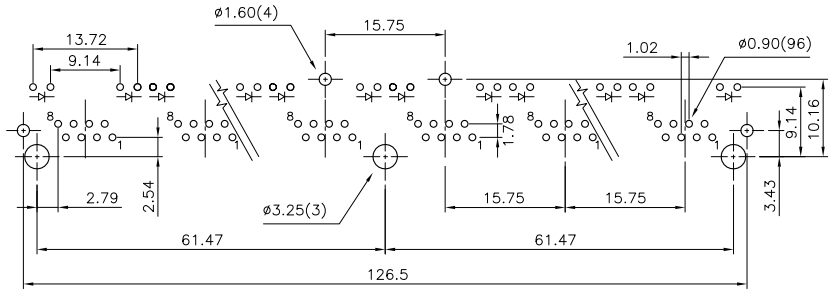

PCB Layout (Ref.)

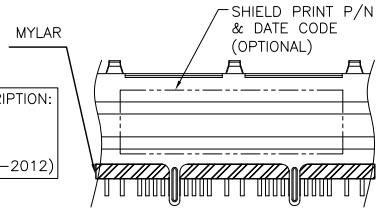

FCI "DATE CODE" DESCRIPTION:
XXXX
WEEK
YEAR(EX: 12––2012)

BLACK VIEW

RoHS Compliant		TOLERANCES ARE
DRAWING BY CY		X. ±
CHECKED BY GENIUS		.X ± 0.25
UNIT / mm	SCALE 1 : 1	.XX ± 0.13
DATE		.XXX ± 0.05
		ANG ±
SIZE A4	PPOJECTION	

MORETHANALL
PCB CONNECTORS
Cable ASSEMBLIES
煜倫股份有限公司
www.morethanall.com

照片框

ORDER INFORMATION

MJF13ULA8-KF06B3GY-0808-LF

- SERIES
- BLACK
- 06u" GOLD FULL SPRING
- REAR TAB 3.43mm
- GREEN / YELLOW
- 8P8C
- LEAD FREE

DESCRIPTION: 8PORTS, RJ45, WITH LED'S SHIELDED, SIDE ENTRY PCB GANGED JACK