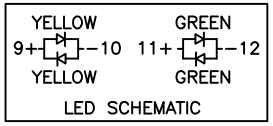

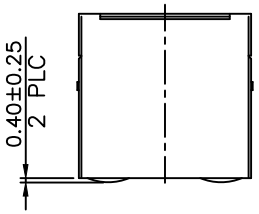

MATERIALS:

- HOUSING–DSM STANYL TE250F6 (NYLON–46)
  HEAT DEFLECTION TEMP.290°
  BLACK COLOR,UL94V–0
- CONTACTS–0.35mm THICK PHOS–BRONZE PLATED
  WITH 6u" HARD GOLD AND GOLD FLASH IN
  SOLDER AREA.
- SHIELD–0.25mm THICK COPPER ALLOY,
  PLATED WITH NICKEL.

CAVITY CONFIRMS TO FCC RULES AND REGULATIONS
PART 68,SUBPART F.

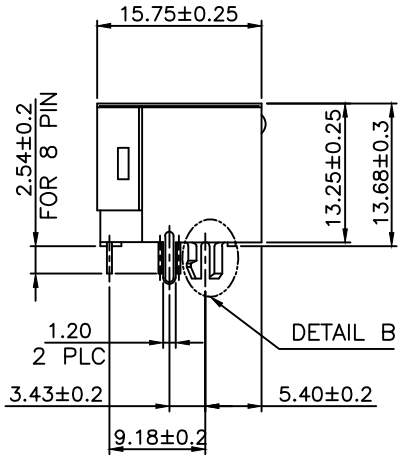

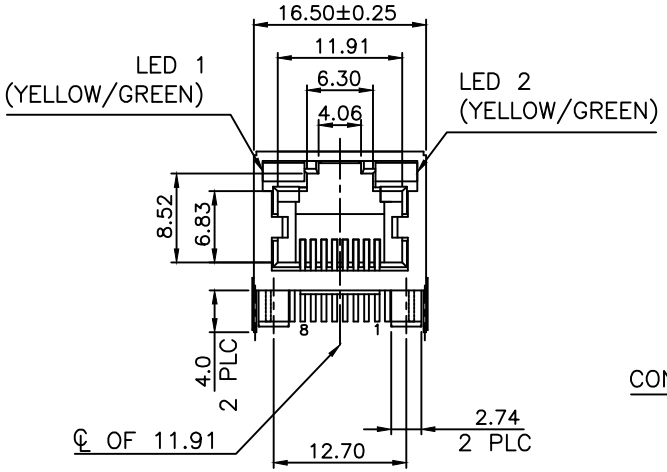

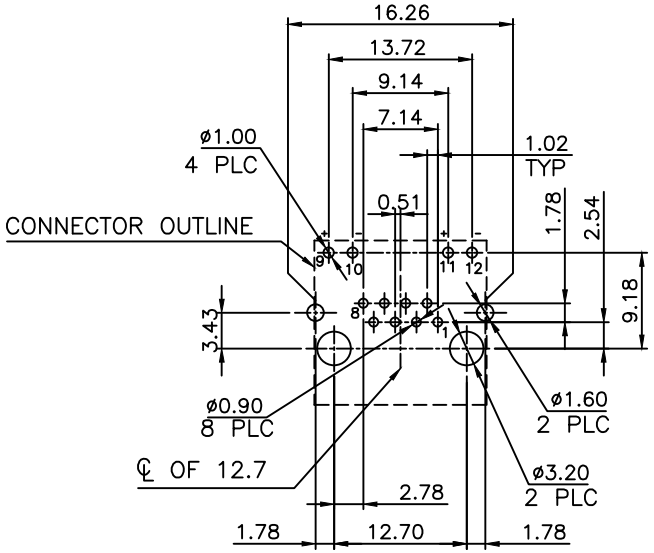

RECOMMENDED PCB LAYOUT
TOLERANCE: ±0.05 (TOP VIEW)

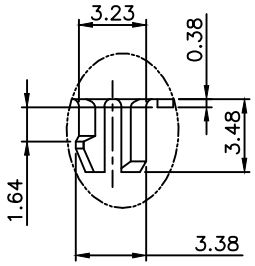

DETAIL B(SCEALE 2:1)

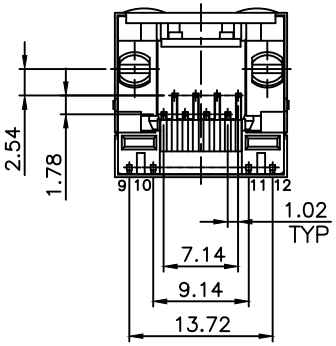

RoHS Compliant

MORETHANALL
PCB CONNECTORS
Cable ASSEMBLIES
煜倫股份有限公司
www.morethanall.com

DRAWING BY CY		TOLERANCES ARE
CHECKED BY GENIUS		X. ±
UNIT / mm	SCALE 1 : 1	.X ± 0.25
		.XX ± 0.13
DATE		.XXX ± 0.05
		ANG ±
SIZE A4	PPOJECTION	

照片框

ORDER INFORMATION

MJF13UL-KX06B3YGYG-0808

- SERIES
- BLACK / NON EAR
- 06u" GOLD
- REAR TAB 3.43mm
- LED1:YELLOW / GREEN
- LED2:YELLOW / GREEN
- 8P8C

DESCRIPTION: RJ45, WITH LED'S, SHIELDED FLAT PIN, SIDE ENTRY JACK