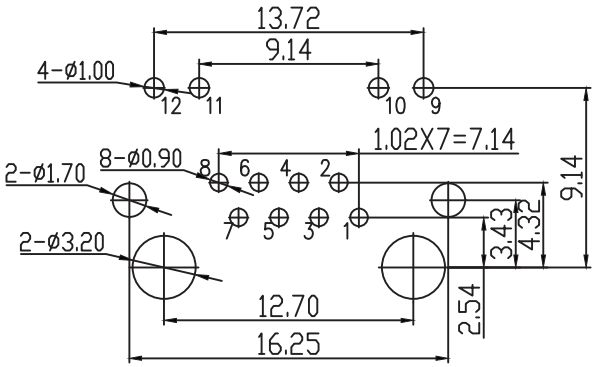

PC Board Layout

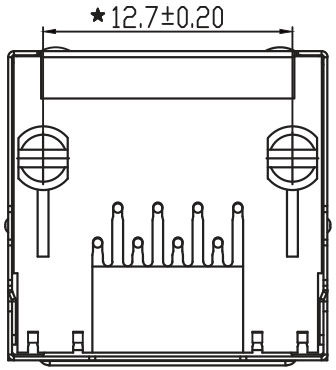

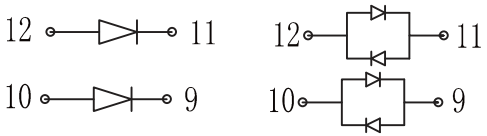

LED 對照

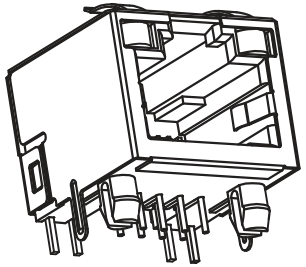

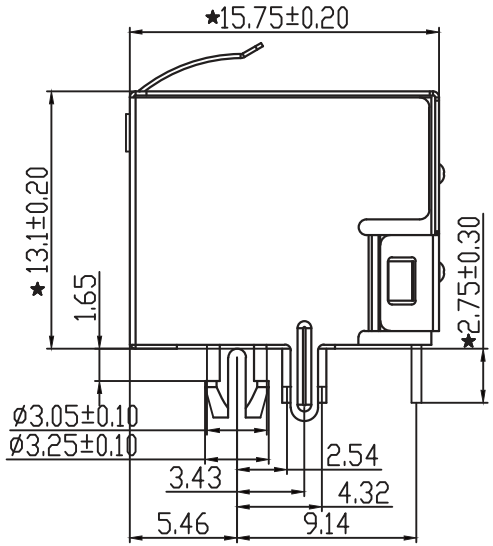

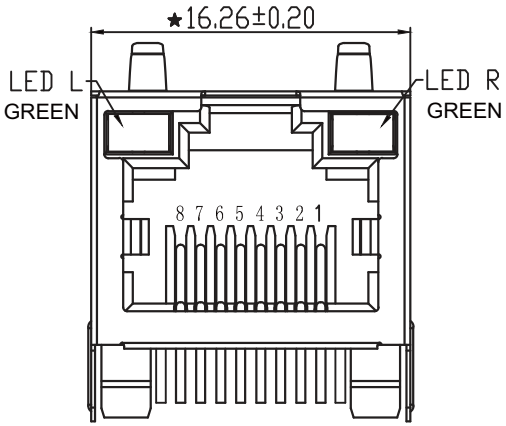

NOTES:
ELECTRICAL:
1. VOLTAGE RATING: 125 VAC RMS.
2. CURRENT RATING: 1.5 AMP.
3. CONTACT RESISTANCE: 30 MILLIOHMS MAX.
4. INSULATION RESISTANCE: 500 MEGOHMS MIN @ 500 VDC.
5. DIELECTRIC STRENGTH: 1000 VAC RMS 50Hz or 60Hz, 1MIN.
MECHANICAL:
1. INSERT MATERIAL: UL94V-0.
2. CONTACT MATERIAL: DIAMETER 0.46MM PHOSPHOR BRONZE
GOLD PLATING OVER NICKEL.
3. SHIELD: 0.20MM THICKNESS H65Y BRASS NICKEL PLATED.
4. MATING/UNMATING FORCE: 2.2KG.F MAX.
5. RETENTION STRENGTH: 7.7KG.F MIN BETWEEN JACK AND PLUG.
6. OPERATING LIFE: 750 CYCLES MIN.
ENVIRONMENTAL:
1. STORAGE: -40℃ ～ +85℃ RELATIVE HUMIDITY<70%.
2. OPERATION: -40℃ ～ +85℃.
Remark:
1. The mark with★is the key inspection dimension for QC.

RoHS Compliant

MORETHANALL
PCB CONNECTORS
Cable ASSEMBLIES
煜倫股份有限公司
www.morethanall.com

DRAWING BY CY		TOLERANCES ARE
CHECKED BY GENIUS		X. ±
UNIT / mm	SCALE 1 : 1	.X ± 0.25
DATE		.XX ± 0.15
		.XXX ± 0.05
		ANG ±
SIZE A4	PPOJECTION	

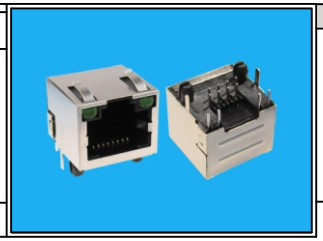

ORDER INFORMATION

MJF13UL-KT01B3GG-0808-LF

SERIES
BLACK
G/F
TOP SPRING
REAR TAB 3.43mm
LED L GREEN/ LED R GREEN
8P8C
LEADFREE

DESCRIPTION: