MATERIAL:

- HOUSING–PBT POLYESTER UL94V–0
  MIXED GLASS FIBER.
  STANDARD COLOR–BLACK.
- CONTACTS–0.35mm THICK PHOS–BRONZE PLATED
  WITH HARD GOLD AND GOLD FLASH IN
  SOLDER AREA.
- SHIELD–0.20mm TIHCK COPPER ALLOY,
  PLATED WITH NICKEL.

CAVITY CONFIRMS TO FCC RULES AND REGULATIONS
PART 68,SUBPART F.

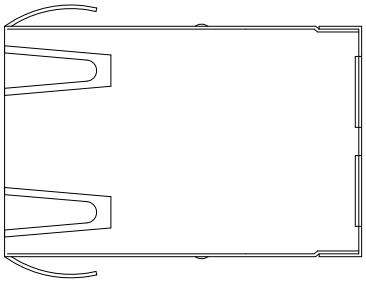

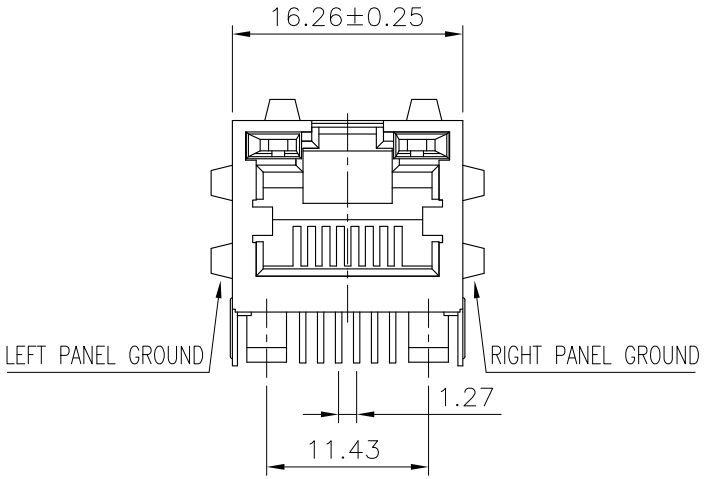

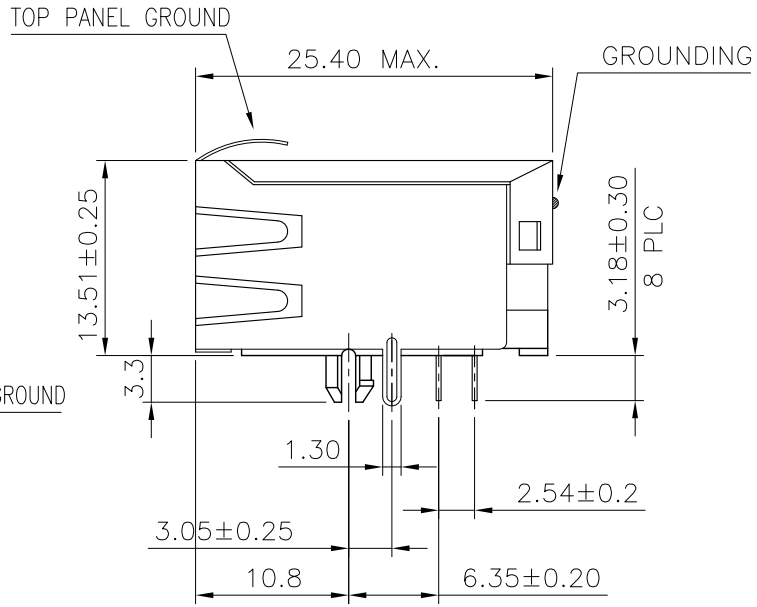

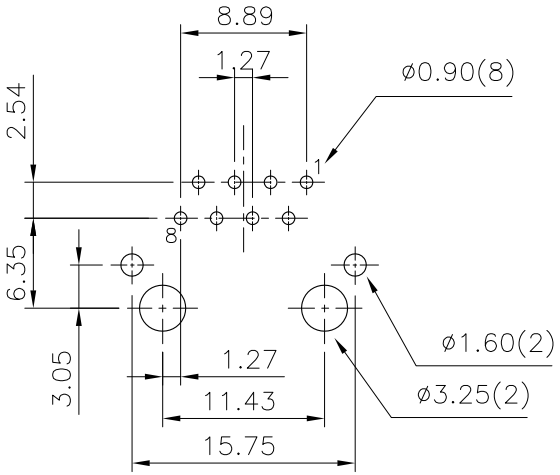

PCB LAYOUT
Ref.

MJF13TxxU-KF06B3-0808

RoHS Compliance

MORETHANALL CONNECTORS ASSEMBLIES	PART NO.MJF13TxxU-KF06B3-0808		RoHS Compliance					
	DWG NO. MJF13TxxU-KF06B3-0808		CHECKED BY CY	TOLERANCES ARE .X ± 0.2 .XX ± .XXX ± AWG	DESCRIP TION:	SINGLE PORT, RJ45, WITHOUT LED DIP TYPE, SIDE ENTRY.		
煜倫股份有限公司	FILE NO.		DRAWING BY					
	UNIT / mm	SCALE 1:1	PROJECTION		AREA	REVISIONS	HK	DATE