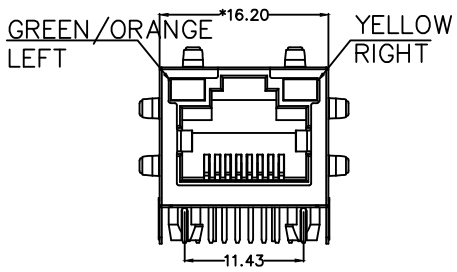

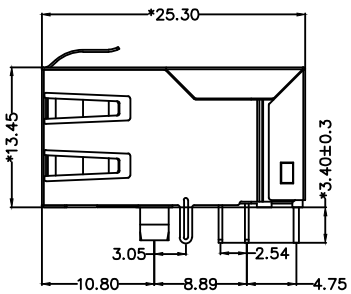

Electrical:
1.Voltage Rating:125 Vac Rms.
2.Current Rating:1.5 Amp.
3.Contact Resistance:20 Milliohms Max.
4.Insulation Resistance:1000 Megohms Min @500 Vdc.
5.Dielectric Strength:1500Vac Rms 60Hz, 1Min.

Mechanical:
1.Operating:750 Cycles Min.

Environmental:
1.Storage:−40°C To +85°C.
2.Opertion:−40°C To +70°C.
Mates With Modular Plug Conforming
To FCC Part 68, Subpart F.

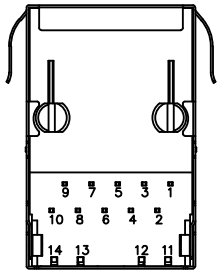

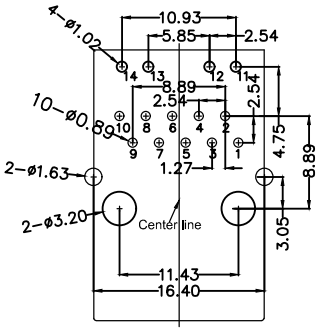

RECOMMENDED PCB LAYOUT
VIEWED FROM COMPONENT SIDE

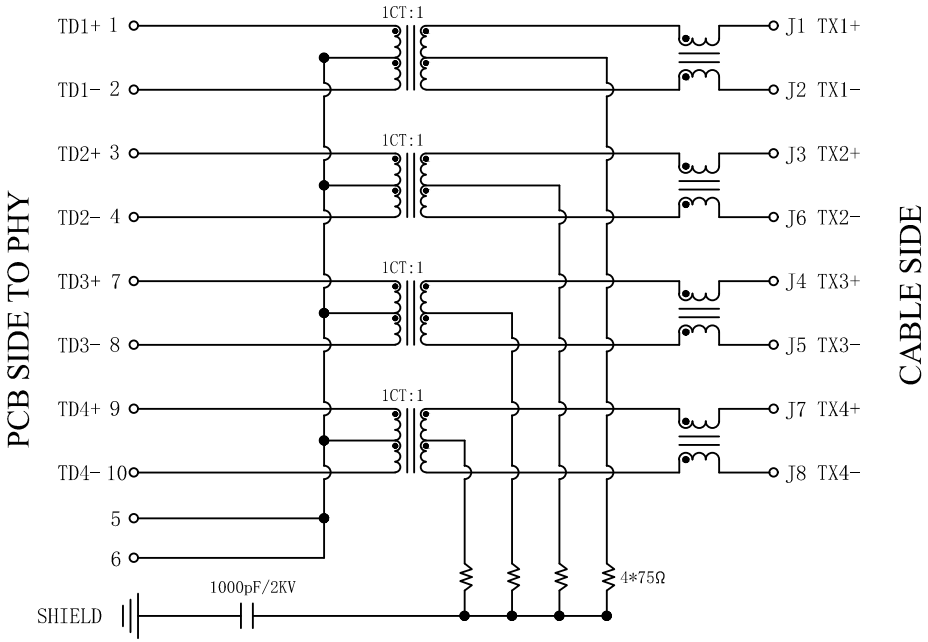

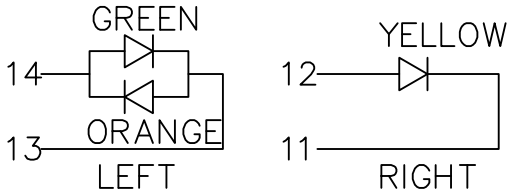

MATERIALS:
PLASTIC HOUSING: ENGINEERING THERMOPLASTIC
FLAMMABILITY RATING UL 94V−0.
CONTACTS: PHOSPHOR BRONZE
PLATING: GOLD PLATING OVER NICKEL IN CONTACT.
TIN PLATING OVER NICKEL IN SOLDER AREA.
SHIELDED: THICKNESS COPPER ALLOY WITH TIN PLATED

RoHS Compliant

MORETHANALL PCB CONNECTORS Cable ASSEMBLIES
煜倫股份有限公司
www.morethanall.com

DRAWING BY CY		TOLERANCES ARE
CHECKED BY GENIUS		X. ± 0.50 .X ± 0.38 .XX ± 0.25 .XXX ± 0.10 ANG ± 3°
UNIT / mm	SCALE 1 : 1	
DATE		
SIZE A4	PPOJECTION	

照片框

ORDER INFORMATION

MJF13T056UL-KF06B3GOYX-0808-LF

SERIES
BLACK
06u" GOLD
FULL SPRING
REAR TAB 3.05mm
GREEN,ORANGE / YELLOW,X
8P8C
LEADFREE

DESCRIPTION: SIDE ENTRY JACK 1000 BASE