MATERIAL:

- HOUSING–PBT POLYESTER UL94V–0
  MIXED GLASS FIBER.
  STANDARD COLOR–BLACK.
- CONTACTS–0.35mm THICK PHOS–BRONZE PLATED
  WITH HARD GOLD AND GOLD FLASH IN
  SOLDER AREA.

SHIELD–0.25mm THICK COPPER ALLOY,
PLATED WITH NICKEL.

CAVITY CONFIRMS TO FCC RULES AND REGULATIONS
PART 68,SUBPART F.

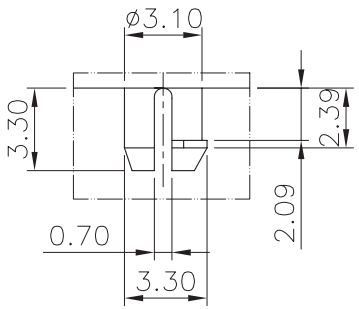

DETAIL X

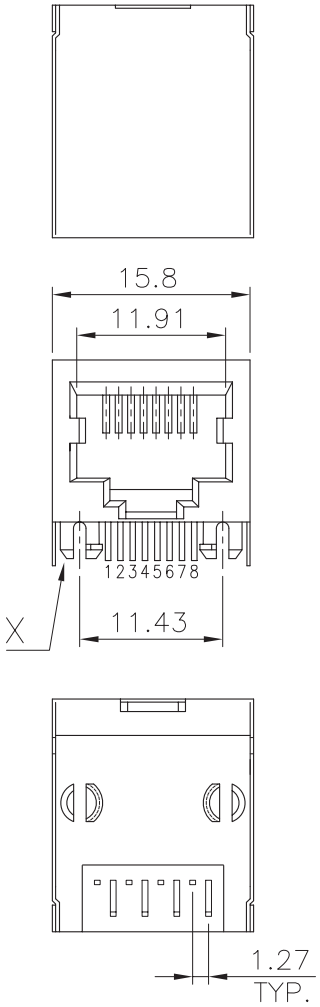

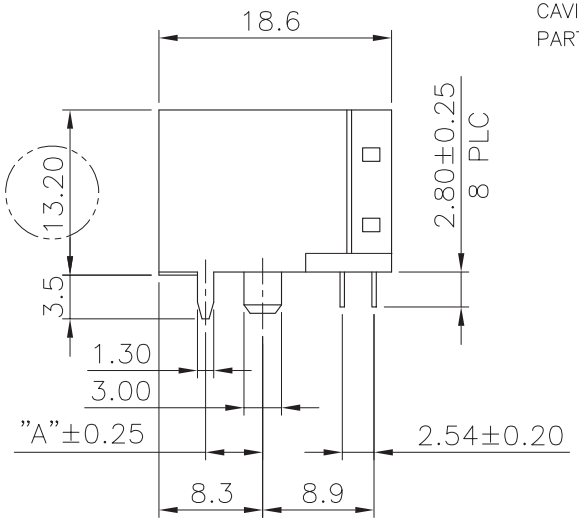

"A" DIM.
4.57
3.65
3.05

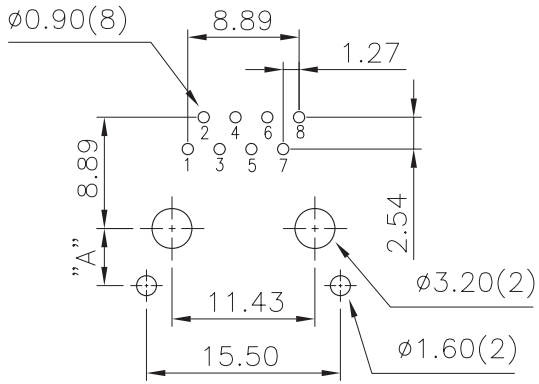

PCB LAYOUT
Ref.

RoHS Compliant

MORETHANALL
PCB CONNECTORS
Cable ASSEMBLIES
煜倫股份有限公司
www.morethanall.com

DRAWING BY CY		TOLERANCES ARE
CHECKED BY GENIUS		X. ± .X ± 0.25 .XX ± 0.20 .XXX ± 0.10 ANG ±
UNIT / mm	SCALE 1 : 1	
DATE		
SIZE A4	PPOJECTION	

照片框

ORDER INFORMATION

MJF13S-KX06AxxT3-0808-LF

SERIES
BLACK
NON EAR
06u"GOLD
FRONT TAB
A3:3.05
A36:3.65
A45:4.57
8P8C
THICK 0.35mm
LEADFREE

DESCRIPTION: RJ45, SHIELDED, LOW PROFILE, SIDE ENTRY PCB JACK